cytiva

AxiChrom 50-200 columns

Operating Instructions

Original instructions
Translation disc included

cytiva.com

Page intentionally left blank

Table of Contents

1 Introduction

About this chapter

This chapter contains information about this manual and associated user documentation, important user information and intended use of the product.

In this chapter

1.1 Important user information

Read this before operating the product

All users must read the entire *Operating Instructions* before installing, operating or maintaining the product.

Always keep the *Operating Instructions* at hand when operating the product.

Do not install, operate, or perform maintenance on the product in any other way than described in the user documentation. If you do, you may be exposed or expose others to hazards that can lead to personal injury and you may cause damage to the equipment.

Intended use of the product

AxiChrom™ 50, 70, 100, 140, and 200 columns are designed for chromatographic separations in process development, scale-up trials, and small scale production.

The columns shall be used in accordance with the safety instructions and technical specifications given in these Operating Instructions so as to avoid injury or damage to the column or other equipment.

AxiChrom columns should not be used in any clinical or *in vitro* procedures or for diagnostic purposes.

Prerequisites

In order to operate AxiChrom 50-200 columns in the way it is intended:

- The user should understand the concepts of liquid chromatography
- The user must read and understand the Safety Instructions chapter in the *Operating Instructions*.
- The column must be installed in accordance with the instructions in the *Operating Instructions*.

1.2 About this manual

Purpose of this manual

The Operating Instructions manual provides information needed to install, operate and maintain the product in a safe way.

Scope of this manual

This manual is designed as a general introduction and guide to using AxiChrom 50, 70, 100, 140, and 200 columns.

AxiChrom 50-200 columns are referred to as "the columns" in this manual.

The columns are preferably operated by a chromatography system running UNICORN™ system control software. For information about the chromatography system or the system control software, see the respective user documentation.

Typographical conventions

Software items are identified in the text by ***bold italic*** text.

Hardware items are identified in the text by **bold** text.

In electronic format, references in *italics* are clickable hyperlinks.

Notes and tips

Note: *A note is used to indicate information that is important for trouble-free and optimal use of the product.*

Tip: *A tip contains useful information that can improve or optimize your procedures.*

Illustrations

The images and annotations in this document are for illustrative purposes only. The configuration of individual products may vary, and therefore illustrations may not be identical to the actual product delivered.

Referencing column components

Many of the procedures in these *Operating Instructions* make reference to specific components on the column. To facilitate easy identification of a specified component, numbers or letters are given within square brackets, [ ]. These correspond to a commonly assigned item in the diagrams for each of the column sizes in the Appendices.

1.3 Associated documentation

Introduction

This section describes the user documentation delivered with the product, and how to find related literature that can be downloaded or ordered from Cytiva.

User documentation for AxiChrom columns

A product documentation package is supplied with each AxiChrom column including detailed specifications, drawings, and traceability documents for the individual column.

The user documentation is listed in the table below.

Translations of the *Operating Instructions* are provided on the User Documentation CD (or USB memory stick) together with the *Product Documentation*, and *Unpacking Instructions*.

Documentation	Main contents
AxiChrom 50-200 columns Operating Instructions (this document)	Instructions needed to prepare and operate the AxiChrom 50-200 columns in a correct and safe way. Column overview, and instructions for moving the system within the same building. Instructions for maintenance and troubleshooting activities.
AxiChrom Product Documentation	Specifications and material conformity.
AxiChrom 50 Unpacking Instructions	Instructions for handling the delivery package and unpacking the AxiChrom column
AxiChrom70-100 Unpacking Instructions	Instructions for handling the delivery package and unpacking the AxiChrom column
AxiChrom140-200 Unpacking Instructions	Instructions for handling the delivery package and unpacking the AxiChrom column
UNICORN Method Manual	The UNICORN Method Manual provides a comprehensive guide to creating methods that can be run on an ÄKTA™ system.

1.4 Abbreviations

Introduction

This section explains abbreviations that appear in the user documentation for AxiChrom 50-200 columns.

If the language is English, the English terms are listed along with their definitions.

In a translated manual, the English terms and definitions are listed along with the translated definitions.

Abbreviations

Abbreviation	Definition (English)	Translation (local language)
CIP	Cleaning In Place	Cleaning In Place
CF	Compression Factor	Compression Factor
EPDM	EthylenePropyleneDieneMonomer rubber	EthylenePropyleneDieneMonomer rubber
FKM/FPM	FluoroCarbonRubber	FluoroCarbonRubber
i.d.	inner diameter	inner diameter
HETP	Height Equivalent to a Theoretical Plate	Height Equivalent to a Theoretical Plate
PE	PolyEthylene	PolyEthylene
PEEK	PolyEtherEtherKetone	PolyEtherEtherKetone
PF	Packing Factor	Packing Factor
POM-C	PolyOxyMethylene	PolyOxyMethylene
PP	PolyPropylene	PolyPropylene
PS	PolyStyrene	PolyStyrene
PTFE	PolyTetraFluoroEthylene	PolyTetraFluoroEthylene
PVDF	PolyVinylideneDiFluoride	PolyVinylideneDiFluoride
SVF	Slurry Volume Factor	Slurry Volume Factor
UHMWPE	UltraHighMolecularWeightPolyethy-lene	UltraHighMolecularWeightPolyethy-lene

2 Safety instructions

About this chapter

This chapter describes safety precautions, labels and symbols that are attached to the equipment. In addition, the chapter gives information on overpressure in the column.

In this chapter

Important

WARNING

Before installing, operating or maintaining the product, all users must read and understand the entire contents of this chapter to become aware of the hazards involved.

2.1 Safety precautions

Introduction

Before installing, operating or maintaining the columns, you must be aware of the hazards described in this manual.

Follow the instructions provided to avoid personal injury, damage to the equipment, or to other personnel and equipment in the area.

The warnings and cautions in the user documentation shall in no way take precedence over more restrictive local regulations and policies. For your personal safety it is important that you have a proper knowledge of the entire process chain that the column is part of. Study any complementary safety instructions and use appropriate personal protective equipment for the specific application and operation environment.

Definitions

This user documentation contains safety notices (WARNING, CAUTION, and NOTICE) concerning the safe use of the product. See definitions below.

WARNING

WARNING indicates a hazardous situation which, if not avoided, could result in death or serious injury. It is important not to proceed until all stated conditions are met and clearly understood.

CAUTION

CAUTION indicates a hazardous situation which, if not avoided, could result in minor or moderate injury. It is important not to proceed until all stated conditions are met and clearly understood.

NOTICE

NOTICE indicates instructions that must be followed to avoid damage to the product or other equipment.

General precautions

The following general precautions must be considered at all times. There are also context related precautions, which are written in their respective chapters.

WARNING

The customer must make sure that all installation, maintenance, operation and inspection is carried out by qualified personnel who are adequately trained, understand and adhere to local regulations and the operating instructions, and have a thorough knowledge of the columns and the entire process.

WARNING

Risk assessment. Perform a risk assessment for any risks due to the process or process environment. Evaluate the effects the use of the product and the operational processes may have on the classification of the hazardous area. The process might cause the area to increase or the zone classification to change. Implement the risk reduction measures needed, including use of personal protective equipment.

WARNING

Before installing, operating or maintaining the product, all users must read and understand the entire contents of this chapter to become aware of the hazards involved.

Failure to do this may cause human injury or death, or damage to the equipment.

WARNING

Do not operate the product in any other way than described in the user documentation.

WARNING

Only properly trained personnel may operate and maintain the product.

WARNING

Accessories. Use only accessories supplied or recommended by Cytiva.

WARNING

Always use appropriate Personal Protective Equipment (PPE) during operation and maintenance of this product.

CAUTION

When unpacking the column, always refer to the unpacking instructions on the packaging to avoid personal injury.

Flammable liquids and explosive environment

WARNING

Explosion hazard: Read and understand all precautions in the Safety instructions chapter regarding flammable liquids and explosive environment before proceeding with any actions or procedures described in this chapter.

WARNING

Flammable liquids. This product is **not approved** for handling liquids under flammable conditions.

WARNING

Some of the chemicals used with the columns may be flammable under certain conditions. Make sure to use chemicals only under conditions where they are not flammable. Refer to local and/or national classifications of flammable liquids.

2.2 Labels and symbols

Introduction

This section describes the product nameplate (label) and other safety and regulatory labels attached to the product.

Product label

The label showing serial number, code number, and manufacturing year of the specific column is located on the top bayonet (50-100 columns) or the top flange (140 and 200 columns).

The following text may be present on the product label:

Product label	Meaning
Serial No	Serial number for the individual column
Code No	Product code number for the column
Mfg Date	Manufacturing Year (YYYY) and month (MM) of manufacture

Label for operating conditions

The label describing operating conditions is located on the column tube near the bottom flange.

The following symbols and text may be present on the label for operating conditions:

Symbol	Description
	**Warning!** Do not use the system before reading the *Operating Instructions*.
Maximal operating pressure	Maximal operating pressure (bar g)
Maximal packing pressure	Maximal packing pressure (bar g)
Operating temperature range	Operating temperature range (°C)

2.3 Column pressure and overpressure

AxiChrom columns have been stringently tested for their pressure tolerances and the effects of overpressure. At high overpressure levels, the borosilicate glass will tend to snap rather than shatter and splinter when filled with liquid.

Section 9.1 Specifications, on page 252 presents the maximum pressure that may be used for packing and operation procedures using the columns. For safe use, these pressure limits shall be observed. Particular attention shall be taken when connecting manual pumps to the column, or deviation in normal operating procedures using chromatography systems that can lead to an over-pressure.

It is strongly recommended that the pressure inside the column is continually measured to detect and deal with any potential overpressure situations. It is also strongly recommended that overpressure safety equipment is fitted. For instructions on how to handle overpressures, see *Section 6.2 Overpressure situation, on page 95*

3 Product description

About this chapter

This chapter contains a general description of the AxiChrom 50-200 columns.

Note: *Part annotations in the descriptive illustrations and tables in this document are not intended to represent the part number designations used when ordering spare parts.*

Refer to the appropriate column documentation, such as the Material Conformity and Spare Parts list when ordering replacement parts, see Section 9.7 Ordering information, on page 271.

In this chapter

3.1 Column description

AxiChrom 50-200 columns have been designed to deliver reproducible results in process development, scale-up trials, and pilot scale production of biomolecules. This is facilitated by the ***Intelligent Packing*** where UNICORN software, ÄKTA systems, and AxiChrom columns work together for a packing of the bed via internal hydraulic axial compression.

AxiChrom 70-200 columns are used with a pivot stand, which allows for easy handling and unpacking of the resin bed. The AxiChrom 50 column is delivered with an AxiChrom foot, but a pivot stand is available as an accessory.

AxiChrom 50-200 columns come in two column tube lengths to allow bed heights between 10 to 30 cm and 30 to 50 cm. The columns are made of USP and FDA classified materials, the materials are animal origin free or have been produced under manufacturing conditions complying with EMA, see *Section 9.2 Materials, on page 257* for materials and classification standards.

Bed support porosity

There are two different bed support porosities available for AxiChrom columns, 10 µm and 20 µm.

To make sure that all particles are larger than the mesh size the bed support porosity should be less than or equal to ⅓ of the average particle size of the resin. Using a bed support with a larger porosity results in particles passing or getting caught in the screen, leading to poor bed efficiency and, for a clogged screen, high pressure.

For AxiChrom 50 and 70 columns with stainless steel bed supports the top and bottom bed supports, adapters, and bottom plates for 10 and 20 µm porosity are not physically interchangeable. Instead, all four column parts must be changed in order to change porosity. Stainless steel bed support kits for the 50 and 70 columns are available as accessories.

3.2 System compatibility

The table below shows the systems recommended for your column, and where ***Intelligent Packing*** is available.

AxiChrom™ column	ÄKTA avant 150™	ÄKTA pilot 600™	ÄKTAprocess™ 6 mm and ⅜ inch	ÄKTAprocess™ 10 mm and ½ inch
50	X	X		
70	X	X		
100		X		
140		X	X	
200		X	X	X

System considerations

Maximum flow rate for ÄKTA avant 150 is 150 mL/min, that will give a maximum flow velocity with AxiChrom 70 of ~ 234 cm/h.

Maximum flow rate for for ÄKTA pilot 600 is 600 mL/min, that is 1200 mL/min in dual pump mode. That gives a maximum flow velocity with AxiChrom 140 of ~ 234 cm/h (in dual pump mode ~ 468 cm/h). Maximum flow velocity for ÄKTA pilot 600 with AxiChrom 200 is ~ 115cm/h (in dual pump mode ~ 229 cm/h).

ÄKTAprocess needs to be configured with **CIP valves** for using ***Intelligent Packing***. The 200 column can be packed and tested with 10 mm and ½ ÄKTAprocess system at a minimum flow velocity of 60 cm/h.

3.3 Illustrations of main components

This section describes the main components of the columns; assemblies, valves, inlets and outlets.

In this section

3.3.1 AxiChrom 50-100

AxiChrom 50 column is delivered with an AxiChrom foot (shown in the illustration), and the 70 and 100 columns with theAxiChrom pivot stand (not shown here).

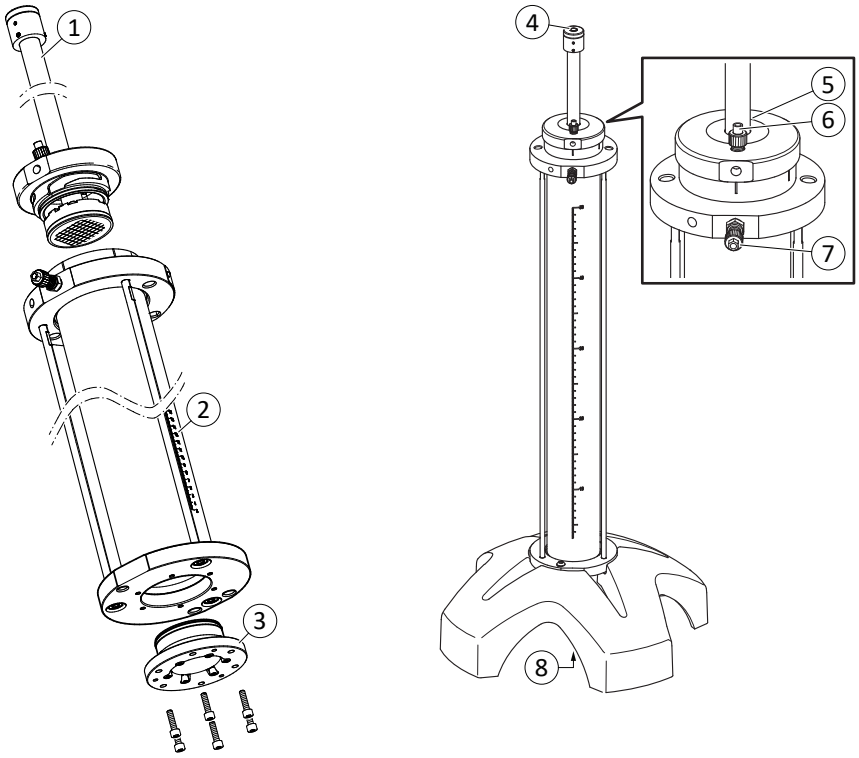

Part	Function	Part	Function
1	Adapter and top plate assembly	5	Vent valve, Hydraulic chamber (hidden behind adapter rod)
2	Column tube assembly	6	Unpacking (Hydraulic chamber outlet)
3	Bottom plate assembly	7	Hydraulic chamber inlet
4	Top mobile phase inlet/outlet	8	Bottom mobile phase inlet/ outlet

3.3.2 AxiChrom 140-200

The columns are deliverd with theAxiChrom pivot stand.

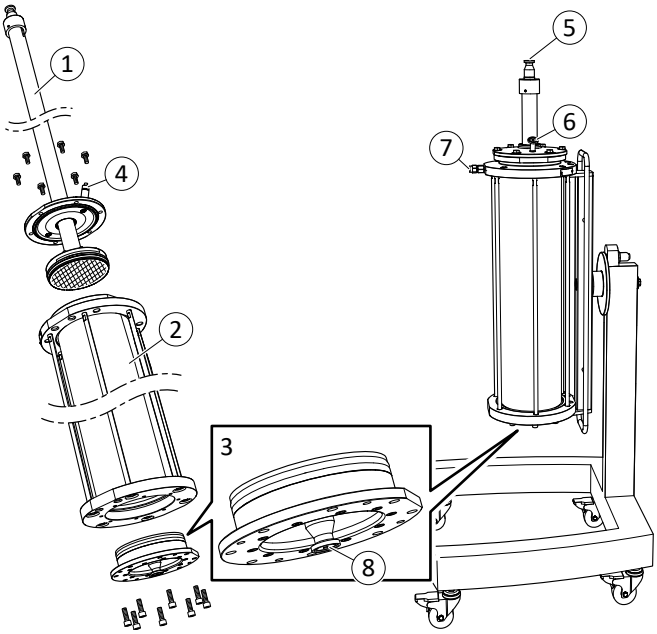

Part	Function	Part	Function
1	Adapter and top plate assembly	5	Top mobile phase inlet/outlet
2	Column tube assembly	6	Hydraulic chamber outlet
3	Bottom plate assembly	7	Hydraulic chamber inlet with check valve
4	Hydraulic chamber vent valve	8	Bottom mobile phase inlet/ outlet

3.4 Principles of column function

In this section

3.4.1 Axial compression

Packing of the columns is achieved by internal hydraulic axial compression. The principle of internal hydraulic axial compression is explained in the description and the illustration below.

A: Axial compression is achieved by driving the adapter downwards in the column tube by pumping hydraulic liquid, typically 20% v/v ethanol or 0.01 M NaOH, into the space between the top plate and the top of the adapter. This space is referred to as the hydraulic chamber. The space between the bottom bed support and the top bed support is the process chamber into which a slurry of resin has been poured.

B: As the adapter moves downwards in the column, packing liquid is forced from the slurry through an outlet in the bottom plate and a consolidated bed is formed.

C: Compression of the bed occurs when the bed support comes into contact with the surface of the consolidated bed and continues moving downwards.

D: The adapter is stopped when the compression corresponds to a predetermined Packing Factor, and thereby attains the target bed height. The adapter remains in place by the pressure of the hydraulic liquid above it.

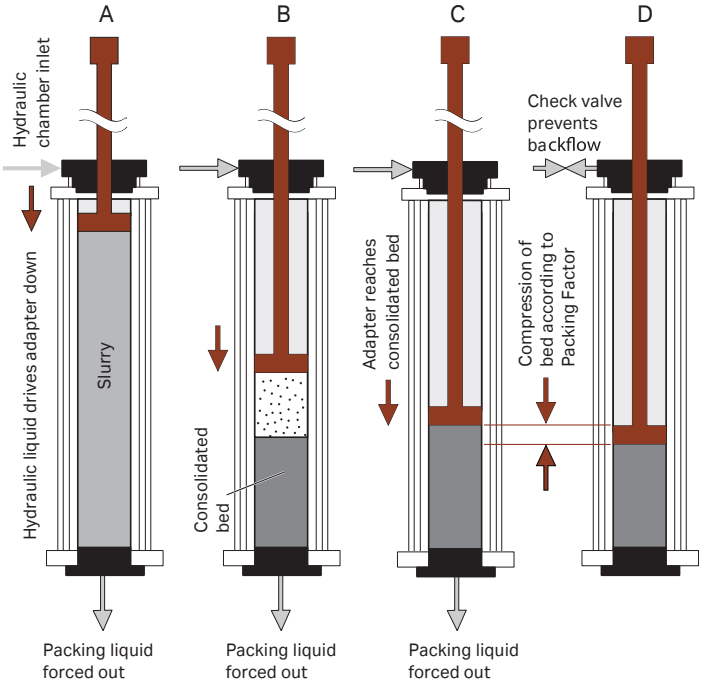

English description	Translated description
Hydraulic chamber inlet	Hydraulic chamber inlet
Hydraulic liquid drives adapter down	Hydraulic liquid drives adapter down

English description	Translated description
Slurry	Slurry
Packing liquid forced out	Packing liquid forced out
Consolidated bed	Consolidated bed
Adapter reaches consolidated bed	Adapter reaches consolidated bed
Check valve prevents backflow	Check valve prevents backflow
Compression of bed according to Packing Factor	Compression of bed according to Packing Factor

3.4.2 Packing flow rates

Due to the adapter rod volume in the hydraulic chamber the volumetric flow rate (mL/minute) into the hydraulic chamber has to be lower than the flow rate used in the process chamber to achieve the same flow velocity (cm/h). The flow rate needed into the hydraulic chamber to move the adapter downwards at two commonly used packing velocities is shown in the table below.

Column	Packing flow rate at 30 cm/h	Packing flow rate at 60 cm/h
AxiChrom 50	8.8 mL/min	17.7 mL/min
AxiChrom 70	17.7 mL/min	35.4 mL/min
AxiChrom 100	35.8 mL/min	71.6 mL/min
AxiChrom 140	4.3 L/h (71.4 mL/min)	8.6 L/h (142.9 mL/min)
AxiChrom 200	9.1 L/h (151.6 ml/min)	18.2 L/h (303.1 mL/min)

Note: *The AxiChrom 200 column can be packed and tested with an ÄKTAprocess 10 mm or ½ inch at a minimum flow rate of 60 cm/h.*

3.4.3 Definitions associated with the Packing Factor

Consolidated bed: Bed settled through exposure to an external force, e.g. flow.

Packed bed: Bed in its final condition for use.

Gravity settled bed: Bed settled only by gravity.

Packing Factor (PF):

$$PF = \frac{\text{consolidated bed height}}{\text{packed bed height}}$$

where the *consolidated bed height* is read when the adapter reaches the consolidated bed,

where the *packed bed height* is read when the bed has been mechanically compressed to its final condition for use.

Compression Factor (CF):

$$CF = \frac{\text{gravity settled bed height}}{\text{packed bed height}}$$

where the *gravity settled bed height* is measured after settling the resin by gravity, read when the resin surface no longer continues to move downwards (usually a few hours up to 48 hours depending on the type of resin),

where the *packed bed height* is read when the bed has been mechanically compressed to its final condition for use.

3.4.4 Inlets and outlets of the column

Inlets and outlets of AxiChrom 50-100

The 50 column is delivered with AxiChrom foot (shown in the illustration), and the 70 and 100 columns with the AxiChrom pivot stand (not shown here).

The illustration below shows the column inlets and outlets for the smaller column sizes (AxiChrom 50 column shown in the illustration).

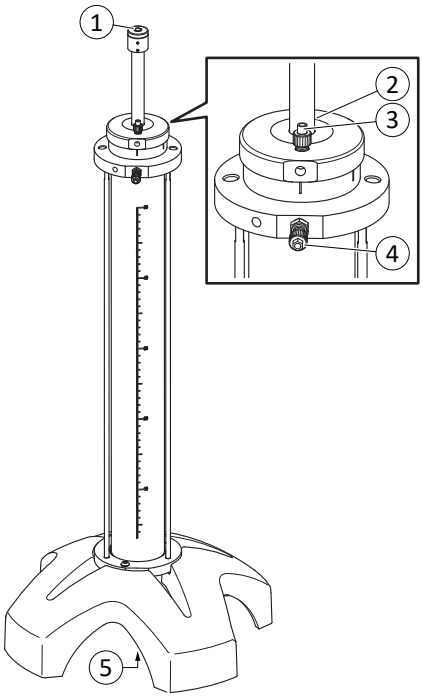

Part	Function
1	Top mobile phase inlet/outlet
2	Hydraulic chamber vent valve (hidden behind adapter rod)
3	Hydraulic chamber outlet (used for unpacking)
4	Hydraulic chamber inlet
5	Bottom mobile phase inlet/outlet

Inlets and outlets of AxiChrom 140-200

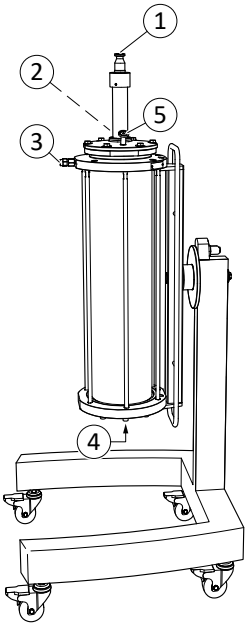

Part	Function
1	Top mobile phase inlet/outlet
2	Hydraulic chamber vent valve (hidden behind adapter rod)
3	Hydraulic chamber inlet with check valve
4	Bottom mobile phase inlet/outlet
5	Hydraulic chamber outlet (used for unpacking)

3.4.5 Inlet and outlet functions

- Top mobile phase inlet/outlet on the adapter - note that the column can be run upflow or downflow.
- Hydraulic chamber vent valve on the top plate is used to get rid of air trapped in the hydraulic chamber. Viewed from above, this valve has a small hole and is fitted with a round nipple.
- Hydraulic chamber outlet on the top plate is used to channel the hydraulic liquid out of the column during unpacking. Viewed from above, this outlet has a larger hole than the hydraulic chamber vent valve, and is fitted with a hexagonal stop plug for AxiChrom 50-100 columns, and with a TC end cap for AxiChrom 140-200 columns.
- Hydraulic chamber inlet on the top flange/top bayonet is used to fill the hydraulic chamber. The hydraulic chamber inlet has an integrated check valve.
- Bottom mobile phase inlet/outlet on the bottom plate - note that the column can be run upflow or downflow.

3.4.6 Port inner diameter (mm) of inlets and outlets

AxiChrom 50-100 columns

Port inner diameter (mm) of inlets and outlets are shown in the table below.

	Column diameter (mm)		
Inlet/outlet connection thread	**50**	**70**	**100**
Bottom mobile phase inlet/outlet, 5/16″	1.7	2.9	2.9
Top mobile phase inlet/ outlet, 5/16″	1.7	2.9	2.9
Internal adapter tubing, 5/16″	1.7	2.9	2.9
Adapter	1.7	1.7 or 2.9 [1]	2.9
Hydraulic chamber inlet, 5/16″	1.5	1.5	2.0
Hydraulic chamber outlet, 5/16″	3.0	3.5	4.0
Hydraulic chamber vent valve, M8	0.9	0.9	0.9

[1] Use narrower tubing for packing gelfiltration or polishing resins. Use the widest tubing compatible with the system for highflow resins such as Capto™ S.

AxiChrom 140 and 200 columns

Port inner diameter (mm) of inlets and outlets are shown in the table below.

	Column diameter (mm)	
Inlet/outlet connection thread	**140**	**200**
Bottom mobile phase inlet/outlet, TC25	4.8	6.0
Top mobile phase inlet/ outlet, TC25	4.8	6.0
Hydraulic chamber inlet, TC25 or 5/16″	2.0	2.0
Hydraulic chamber outlet, TC25	6.4	6.4
Hydraulic chamber vent valve, M12	3.0	3.0

4 Installation

About this chapter

This chapter provides required information to enable users and service personnel to fit the column onto the AxiChrom foot or the pivot stand and connect the column to ÄKTA systems. It also describes the mechanical locking of the adapter, and the use of the pivot stand and adapter holder.

CAUTION

Always make sure that there is no leakage after any of the parts have been fitted or removed.

In this chapter

4.1 Fit the 50 column onto the AxiChrom foot

AxiChrom 50 column is delivered with an AxiChrom foot [123-1]. Place the column in the foot on an even and level foundation and tighten the screws [123-2].

4.2 Use of the pivot stand for the 50-200 columns

AxiChrom 70, 100, 140, and 200 columns are delivered with a pivot stand. A pivot stand is also available as an accessory to the AxiChrom 50 column.

The pivot stand can be used for emptying the column but also during service by locking the column in an upside down position to facilitate removal of the bottom plate.

WARNING

Keep fingers away from the locking mechanism while rotating the column, to avoid injury.

In this section

4.2.1 Fit the column onto the AxiChrom pivot stand

For AxiChrom 50-200 columns.

Assemble the column onto the pivot stand as follows:

Step	Action
1	Make sure that the pivot stand is placed on an even surface.
2	Make sure that the stand arm is secured with the locking pin to prevent rotation of the arm.
	CAUTION The pivot stand locking pin is secured to prevent the column from rotating by accident.
3	**For AxiChrom 140 and 200 columns:** lock the wheels of the pivot stand.
4	Lift the column vertically and begin by guiding the two holes at the bottom flange onto the pins at the lower end of the stand arm. Then guide the two holes at the top flange onto the pins at the upper end.
5	Secure the column top and bottom at the stand arm with the screws [701-2].
	CAUTION Place the column where it is protected from damage and in such a way that it cannot be knocked over to hurt someone or cause damage.

4.2.2 Tilt the 50-100 column tube

Step	Action
1	Release the pin at the back of the vertical stand bar. Secure the column by hand to prevent unintentional movement.
2	Tilt the column for emptying or swing the column upside down.
3	Secure the arm again by first pushing and then screwing the pin into the stand arm.

NOTICE
The adapter and top plate assembly must be removed prior to releasing the pin at the stand for tilting the column.

NOTICE
It is recommended that two people work together to empty the column properly.

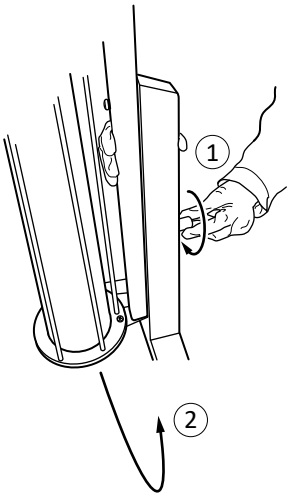

4.2.3 Tilt the 140–200 column tube

Step	Action
1	Lock the wheels of the pivot stand.
2	Release the pin at the back of the vertical stand bar. Secure the column by hand to prevent unintentional movement.
3	Tilt the column for emptying or swing the column upside down. The column can be locked in both upright as well as tilted positions. There are six different locking positions, each separated with an angle of 60 degrees.

CAUTION
Do not tilt the column when the adapter is placed in the adapter holder. Always remove the adapter and holder first.

4	Secure the arm again by inserting the locking pin into the locked position.

NOTICE
The adapter and top plate assembly must be removed prior to releasing the pin at the stand for tilting the column.

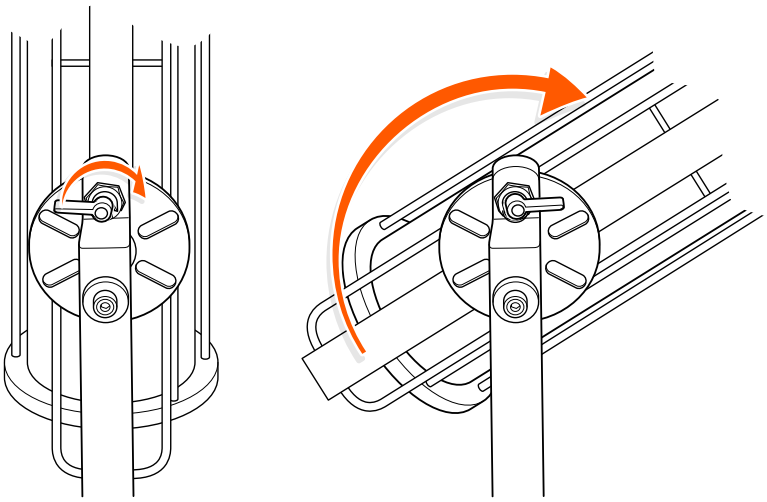

4.2.4 Remove the column from the AxiChrom pivot stand

The following procedure is used to remove the column from the pivot stand.

Step	Action
1	Make sure that the pivot stand is placed on an even surface.
2	Make sure that the pivot stand arm is locked with the pin at the back of the vertical stand bar.
	CAUTION The pivot stand locking pin is secured to prevent the column from rotating by accident.
3	**For AxiChrom 140 and 200:** Lock the wheels of the pivot stand.
4	Unscrew and remove the screws [701-2] at the top bayonet/top flange [804] and bottom flange [805].
5	Lift the column vertically to remove the column from the pins at the upper and lower end of the stand arm.

4.3 Mechanical locking of the adapter

To maintain axial compression between runs or for storage, mechanical locking equipment can be used. This allows the position of the adapter to be locked without the need for hydraulic pressure. The locking equipment is ordered as separate accessory, see Ordering information.

CAUTION

High pressure. Never move the adapter in a column while mechanical locking equipment is fitted. Remove the mechanical locking equipment first.

In this section

4.3.1 Fit the mechanical locking equipment

Step	Action
1	Disconnect the tubing that leads from the system to the mobile phase position at the adapter rod top. **For AxiChrom 50-100:** disconnect the tubing at the system and fit a stop plug onto the tubing. **For AxiChrom 140-200:** disconnect the tubing at the adapter.
2	Make sure that the pocket at the arm of the mechanical locking equipment is properly positioned at the adapter rod top. Check that the tie rods of the mechanical locking are screwed tight into the arm. ***Note:*** *If the mechanical locking equipment is correctly fitted there should be no thread visible on the tie bars under the locking arm.*
3	**For AxiChrom 50-100:** Remove the stop plug from the tubing and connect to the system again. **For AxiChrom 140-200:** Reconnect the tubing to the mobile phase position on the adapter.
4	Run the locking nuts up the thread of the tie rods until in contact with the top bayonet/top flange, tighten loosely by hand. **NOTICE** By tightening the locking nuts on the mechanical locking equipment, there is a risk of working the adapter down and compressing the bed further than intended during the packing of the column.
5	Check that the mechanical locking equipment is firmly fixed onto the column and that the parts sit securely.
6	To avoid air entering the column after disconnection/connection to the system, apply upflow through the column to evacuate any air trapped in the tubing.

Step	Action
7	Insert and hold a syringe into the top of the hydraulic chamber vent valve to avoid liquid spraying out from the hydraulic chamber. Relieve the pressure in the hydraulic chamber by gently opening the hydraulic chamber vent valve [107] at the top plate [803] *Section 6.2.2 Release pressure from the hydraulic chamber, on page 97*.

CAUTION
If the hydraulic chamber vent valve is opened while there is pressure in the hydraulic chamber, liquid will spray out. Take necessary precautions to avoid personal injury or damage to equipment.

AxiChrom 70 column	AxiChrom 200 column
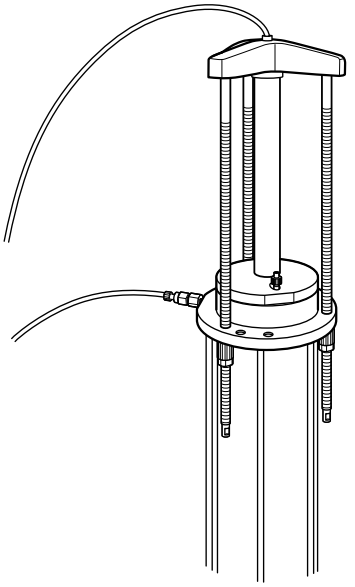	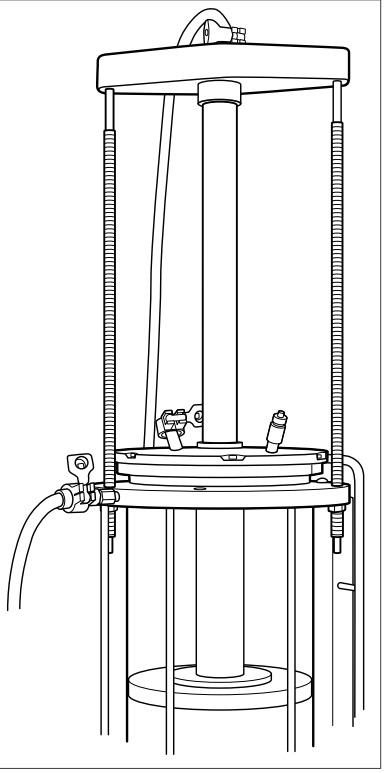

4.3.2 Remove the locking equipment

Step	Action
1	Loosen the nuts by hand on the mechanical locking equipment until it comes free. If the nuts are too tight to release by hand, see *Section 8.4 Mechanical locking equipment, on page 249* under Troubleshooting.
2	Remove the tubing at the top mobile phase inlet/outlet.
3	Remove the nuts and withdraw the mechanical locking equipment from the column.

4.4 Adapter holder for 140-200 columns

The adapter holder is an accessory used to facilitate and ergonomically assist the work, especially when priming the adapter. It is also usable for short time storage of the adapter. The image below shows the adapter resting on the adapter holder.

It is also possible to carefully move the column short distances with the adapter in the adapter holder see *Section 5.2.3 Move a 140-200 column with a pivot stand, on page 66*.

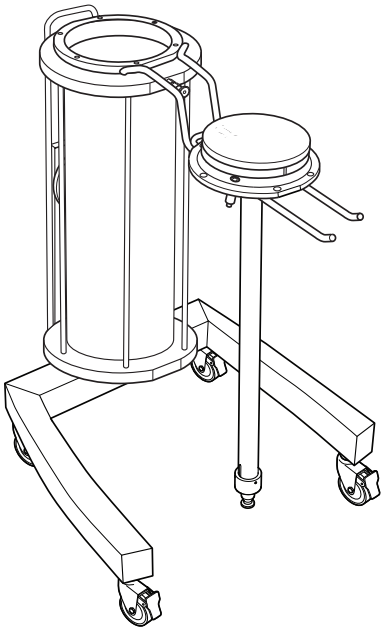

Note: *The column might tilt slightly when the adapter holder is placed on the column. Make sure to level the column to compensate for this.*

Fit the adapter holder

There are four holes on the upper side of the top flange. The ends of the adapter holder are from above placed in two of the holes. When priming or moving the column short distances, always place the adapter holder opposite to the hydraulic chamber inlet, as in the illustration above.

Note: *The adapter holder fits in three different positions in the column top flange, any one of which can be used for short term storage.*

CAUTION

Before hanging up the adapter, check that the adapter holder is securely mounted (attached) by pressing downwards on it with your hand.

Place the adapter in the adapter holder

Hold the adapter upside down. Carefully hang up the adapter and make sure that the upper side of the lid rests on the adapter holder, see the illustration above.

CAUTION

Make sure that neither the vent valve nor the hydraulic chamber outlet blocks the lid from resting securely on the adapter holder.

Note: *When the column is filled with resin slurry, carefully remove the adapter holder to avoid spilling.*

4.5 Rupture discs

Introduction

To secure equipment and personal safety, rupture discs are available as accessories for AxiChrom 140 and 200 columns. Since the 140 and 200 columns have a maximum design pressure of 8 respective 6 bar, there is a risk of over pressurizing the column using a system able to produce a higher pressure.

Rupture discs provided by Cytiva come with a special T-junction. When installing the rupture discs, do not use this junction with other rupture discs than those recommended by Cytiva. Preferably place the T-junction directly on the system and connect an appropriate pipe or hose on the other side of the rupture disc as vent.

The Rupture disc assembly is shown in the image below.

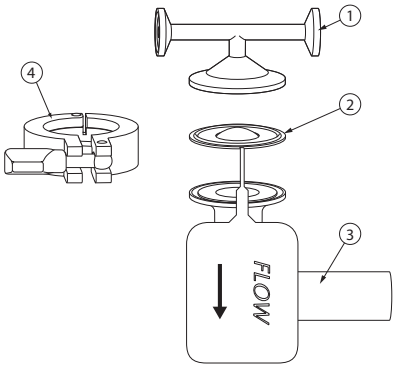

Part	Description	Part	Description
1	T-junction	3	Vent
2	Rupture disc	4	Clamp

Installing rupture discs

NOTICE
When installing the rupture disc, it should always be placed at the column inlet. For processes that switch between upflow and downflow, install rupture discs on both sides of the column.

NOTICE
Rupture discs on mobile inlets will not protect the hydraulic chamber due to resin characteristics. Use separate rupture disc on hydraulic outlet.

To install rupture discs, do as follows:

Step	Action
1	Install the T-junction on the system output. ***Note:*** *For priming purposes it is recommended that the T-junction holding the disc is pointing downwards to let captured air escape.*
2	Choose appropriate hose or pipe with a TC50 ferrule as vent. **CAUTION** Do not place rupture disc vent towards an area where it would endanger personnel.
3	Verify and make sure that all ferrule and clamp working surfaces are clean, dry, and free of nicks, dents, gouges, and wear.
4	Inspect gasket position and make sure that gasket ID is centered on the dome of the disc, then place the rupture disc into the ferrules with the flow arrow on the rupture disc tag pointing in the same direction as the desired vented flow after rupture. **NOTICE** Always handle rupture discs with extreme caution.
5	Install the clamp around the ferrules so that the gap between the two clamp halves is centered on the rupture disc tag.
6	Hand-tighten the wing nut until the clamp is fully engaged with the ferrules and the rupture disc is securely in position. The nut will turn freely until it becomes snug with the clamp. Tighten another 1 to 1.25 turns.

Step	Action
7	Connect the T-junction to desired inlet on the column using appropriate tubing. **CAUTION** Double check the orientation of the rupture disc. Verify that the flow arrows on the disc tags are pointed in the same direction as the desired vented flow after rupture.

4.6 Connect the column to the system

In this section

4.6.1 Introduction

This section describes how to connect the column to various ÄKTA chromatography systems that supports ***Intelligent packing***. Some guidance is also available in the ***Intelligent Packing*** wizard or phases. Additional instructions and information about available tubing kits is also provided on the product web page for the AxiChrom columns.

The tubing used between column and system can have some effect on the resolution. Use tubing with a narrow inner diameter for resin with an approximate bead size of < 50 µm. Using excessively long tubing could also affect the resolution and back pressure.

WARNING

Make sure that all tubing is placed so that the risk for tripping accidents is minimized.

For 140 and 200 columns:

CAUTION

Make sure that a rupture disc is installed on the system.

4.6.2 Tubing used between column and system

In this section recommended tubing lengths and inner diameters (i.d.) is presented. Additional information about specific tubing kits is available on the product web page for AxiChrom columns.

Tubing inner diameters

When two i.d. for the tubing is given in the table below, the most narrow i.d. is recommended for a resin with a bead size of less than an approximatly 50 µm.

Column diameter (mm)	ÄKTA system	Tubing i.d. (mm)
50	ÄKTA avant 150	1.7
50	ÄKTA pilot 600	1.7
70	ÄKTA avant 150	1.7
70	ÄKTA pilot 600	1.7[1], 3.2
100	ÄKTA pilot 600	3.2
140	ÄKTA pilot 600	3.2
140	ÄKTAprocess 6 mm / ⅜ inch	3.2[1], 4.8
200	ÄKTA pilot 600	3.2
200	ÄKTAprocess 6 mm / ⅜ inch	3.2 [1], 6.4
200	ÄKTAprocess 10 mm / ½ inch	3.2[1], 6.4

[1] Recommended for resin with a bead size of less than approximately 50 µm.

For ÄKTAprocess systems the name depends on dimension and material of the flowpath, mm for PolyPropylene (PP), or inches for stainless steel.

Tubing lengths

The table below gives general recommendations on tubing lengths for an AxiChrom column placed on the floor. For more information about available tubing kits see AxiChrom product web page.

Connection between		Lenght (mm)
Column top mobile phase inlet/outlet	Chromatography system	1600
Column bottom mobile phase inlet/outlet	Chromatography system	1600
Column hydraulic chamber inlet (check valve)	Chromatography system	1200
Column hydraulic chamber outlet (unpacking)	Waste	1600

4.6.3 Connect to ÄKTA avant 150

The illustration below shows tubing connections for ÄKTA avant 150.

Connect the column to the system as described in the illustration in the ***Intelligent Packing*** phase and according to those column valves chosen in the method, see *Section 6.5.2 Create a method using Standard verified packing settings, on page 114* for ÄKTA avant 150.

Note: *Use a T-connection on the outlet tubing.*

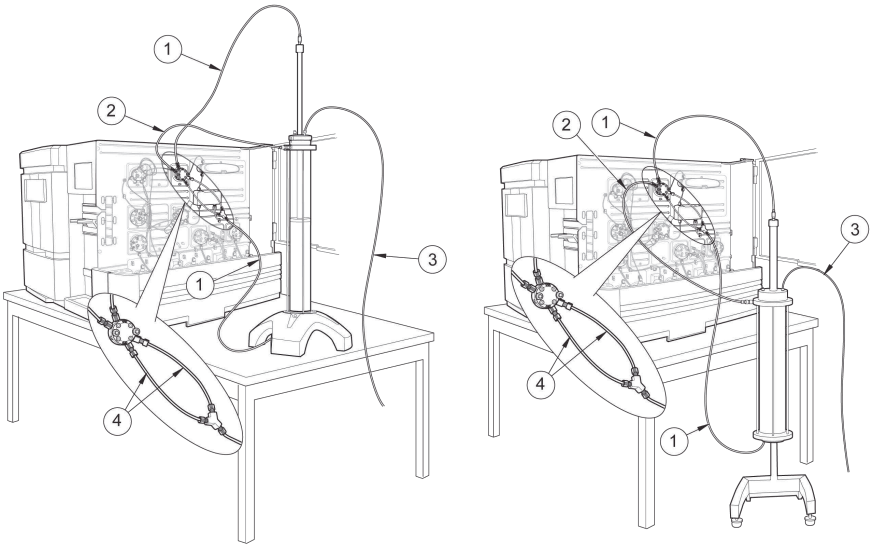

Pos.	Tubing kit, AxiChrom 50 / ÄKTA avant 150 / desk	Tubing kit, AxiChrom 50 and 70 / ÄKTA avant 150 / floor
1	i.d. 1.7 / L=1200 (x2)	i.d. 1.7 / L=1600 (x2)
2	i.d. 1.7 / L=800 (x1)	i.d. 1.7 / L=1200 (x1)
3	i.d. 2.9 / L=1600 (x1)	i.d. 2.9 / L=1600 (x1)
4	i.d. 1.7 / L=200 (x2)	i.d. 1.7 / L=200 (x2)

4.6.4 Connect to ÄKTA pilot 600

ÄKTA pilot 600 has ***Intelligent Packing*** support for AxiChrom 50-200 columns. This section gives a general description for connecting the columns.

ÄKTA pilot 600 has SNAP connections for the tubing, so the use of a SNAP connection adapters is needed for connecting the column to the system.

For details about tubing, see section *Section 4.6.2 Tubing used between column and system, on page 51*.

More information about available tubing kits for AxiChrom columns is available on the AxiChrom poduct web page.

Connections for ÄKTA pilot 600

The images below shows a basic configuration for connecting the column to an ÄKTA pilot 600. Illustration A is valid for AxiChrom 50 with an AxiChrom foot placed on a desk. For more detailed information on how to connect a 50 column, see *Tubing connection adapter for 1.7 mm tubing, on page 55*.

Illustration B illustrates the connection of AxiChrom columns with pivot stand placed on the floor.

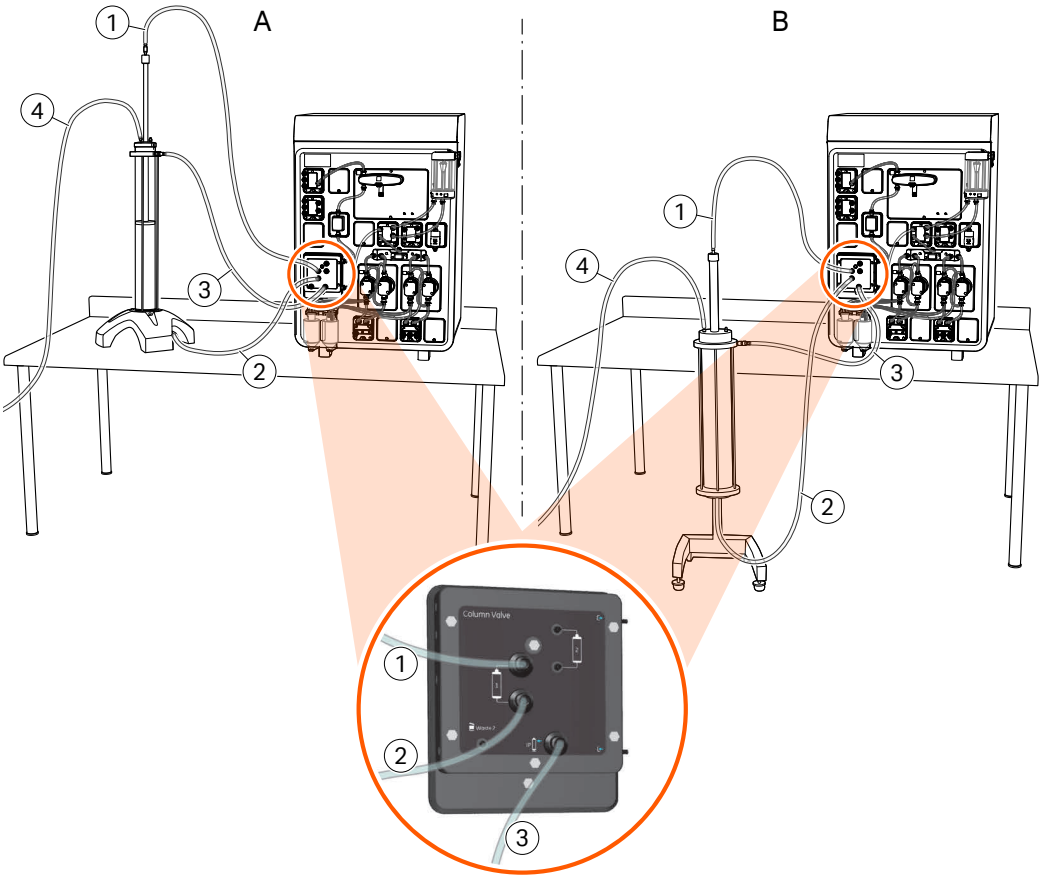

Pos.	Tubing connections
1	Column valve ÄKTA pilot 600 → Column top
2	Column valve ÄKTA pilot 600 → Column bottom
3	***Intelligent Packing*** (**IP**) port ÄKTA pilot 600 → Column check valve
4	Column hydraulic chamber outlet → waste

For most of the AxiChrom columns, it is recommended to use tubing with inner diameter 3.2 mm for the ÄKTA pilot 600, see *Section 4.6.2 Tubing used between column and system, on page 51*. The type of 3.2 mm tubing delivered with the ÄKTA pilot 600 can be cut to desired length using the ÄKTA pilot 600 tubing cutter. Connection adapters are needed for connecting the column to the system since SNAP connectors is used on the system. For more information about tubing kits and other accessories for ÄKTA pilot 600 and the AxiChrom columns see product web pages or contact Cytiva sales and customer representative.

Tubing connection adapter for 1.7 mm tubing

For AxiChrom 50 columns it is recommended to use a tubing kit with i.d. 1.7 mm, see *Section 4.6.2 Tubing used between column and system, on page 51*. This requires tubing connection adapters for all connections between the column and ÄKTA pilot 600, see illustration below. These connectors are included in the tubing kit, available as an accessory on the AxiChrom poduct web page. This is also valid for AxiChrom 70 when used with a resin with a bead size of less than an approximatly 50 µm.

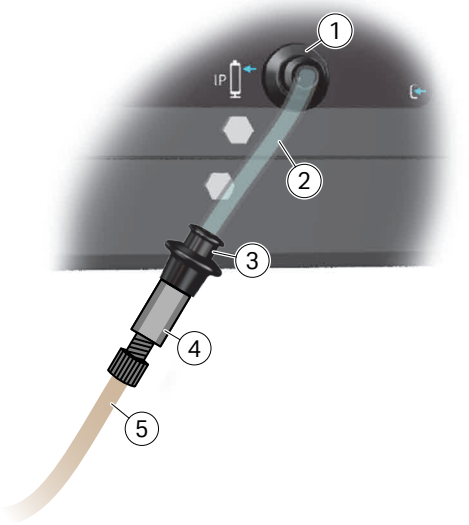

Part	Function
1	SNAP 3.2 mm connector
2	Tubing, i.d. 3.2 mm / L=200 mm
3	SNAP 3.2 mm connector
4	Union 5/16″ in Female – SNAP 3.2 mm
5	Tubing, i.d. 1.7 mm

4.6.5 Connect to ÄKTAprocess

The image below shows a basic configuration for connecting a 140 or a 200 column to an ÄKTAprocess system which enables for ***Intelligent Packing***. Recommended overpressure safety equipment such as rupture disc is not shown in this illustration, see *Section 4.5 Rupture discs, on page 46*.

Note: *Rupture discs are available for 140 or 200 columns. Safety valves are available as accessories for other columns.*

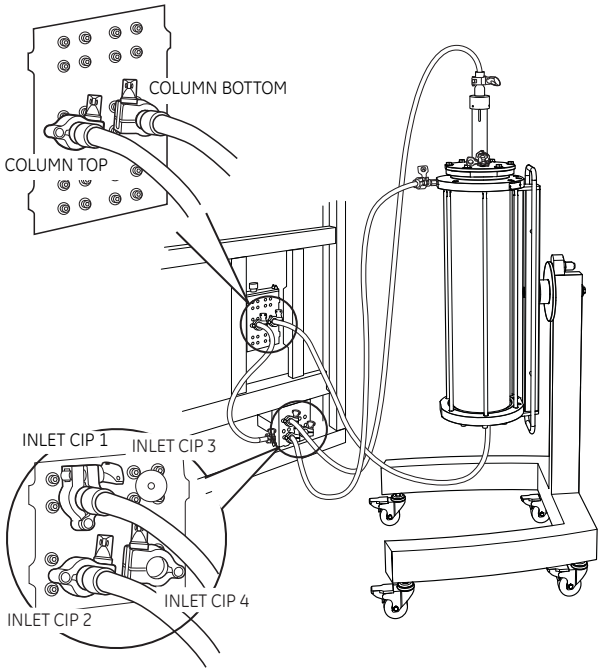

Step	Action
1	Make sure that the system **COLUMN TOP** position is connected to the CIP valve outlet located on the left hand side of the CIP valve.
2	Connect the column top to **INLET CIP1**.
3	Connect the hydraulic chamber to **INLET CIP2**.
4	Connect the column bottom to the **COLUMN BOTTOM** position of the system.

5 Preparation

About this chapter

This chapter gives the required information to prepare the AxiChrom for use.

Some sections are cross-referenced from relevant points in this Operating Instructions.

In this chapter

5.1 Additional equipment for operation

In addition to the AxiChrom column and the resin, other equipment that is needed is described below.

In this section

5.1.1 General equipment

The following equipment is needed for all packing methods:

- Spirit level for leveling the column
- Media stirrer, to stir the resin in its container and in the column tube.
- Appropriate tubing and connectors. For more information about the lengths and diameter of tubing needed, see *Section 4.6 Connect the column to the system, on page 49*.
- Syringe for air purging of the hydraulic chamber.

5.1.2 Equipment needed for Intelligent Packing

The following equipment is needed to perform ***Intelligent Packing***:

- Computer with UNICORN software and an Instrument Configuration including ***Intelligent Packing*** or an Intelligent Packing strategy
- Compatible ÄKTA system

  The table below describes the the system and column compatibility for the AxiChrom columns.

ÄKTA system	Column diameter (mm)
ÄKTA pilot 600	50, 70, 100, 140, and 200
ÄKTA avant 150	50 and 70
ÄKTAprocess 6 mm / ⅜ inch	140 and 200
ÄKTAprocess 10 mm / ½ inch	200

5.1.3 Equipment needed for manual packing

If a AxiChrom column is to be manually packed it is important to select a pump that can adequately supply the necessary flow rate. Recommended packing flow rate is found in section *Section 3.4.2 Packing flow rates,* .

CAUTION
Never exceed the maximum rated pressure for the column. Be aware that the column has a 'packing pressure' and an 'operating pressure'. For details of packing and operating pressures, see *Section 9.1 Specifications, on page 252*.

5.2 Move the column

AxiChrom 50-200:

CAUTION

The user shall employ a proper lifting technique to prevent injury to his/her back when lifting the column. If the user is in any doubt about being able to lift the column, the user shall request the appropriate assistance.

CAUTION

Use protective footwear whenever the column is moved to avoid injury.

NOTICE

Disconnect all tubing and plug the top and bottom inlets/outlets and the hydraulic chamber inlet before the column is moved.

NOTICE

Do not hold the column by the adapter rod as this can damage the column.

NOTICE

Take care not to subject the adapter rod to mechanical forces as this could lead to malfunctioning of the column.

AxiChrom 140-200:

CAUTION

If moving the column with the adapter in the adapter holder, make sure that the adapter and the adapter holder are hung securely.

CAUTION
If the adapter is hanging in the adapter holder, it is not recommended to move the column over bumps like door thresholds etc.

CAUTION
Do not climb on the adapter holder while moving the column, as this may cause it to overturn.

In this section

5.2.1 Move a 50 column with an AxiChrom foot

An AxiChrom 50 column fitted into the foot can be manually lifted and moved. If necessary, the column can be placed onto a trolley or other stable transport equipment. The column shall be lifted vertically using the top bayonet and a hand supporting the column foot. Under no circumstances shall the column be lifted using the adapter rod. Remember that the column will be heavier if packed with resin.

5.2.2 Move a 50-100 column with a pivot stand

The pivot stand facilitates easy repositioning or moving of the column.

Step	Action
1	Hold the column by the stand arm and/or the top bayonet (A), and NOT on the adapter rod (B).

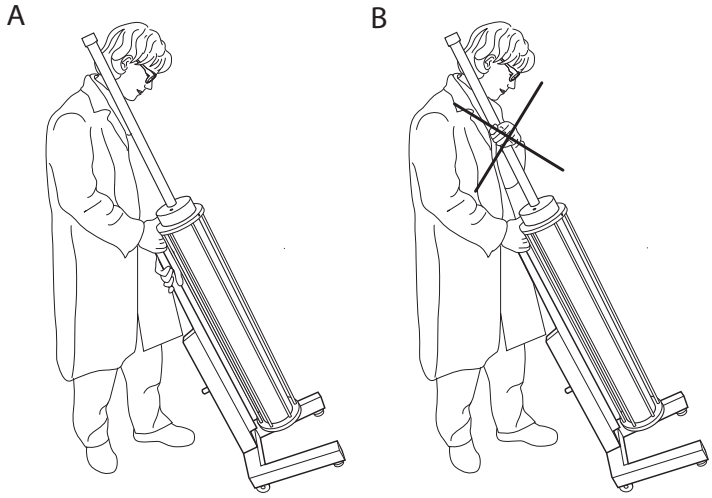

2	Tilt the column backwards onto the wheels.
3	Hold the column by the stand arm and pull the column backwards. Pulling the column is more stable than pushing it. ***Note:*** *It is recommended to use the mechanical locking equipment when moving a packed column.* **CAUTION** Make sure not to touch the locking equipment for the arm of the pivot stand when moving the column, to avoid injury and rotation of the column. If transporting the column in the pivot stand without the top plate and adapter fitted, place a centering tool into the opening of the column to secure the tube in place. For correct positioning of the centering tool, see *Reassemble the column tube assembly, on page 225*. After moving the column to its resting position, level the column (see below).

5.2.3 Move a 140-200 column with a pivot stand

The pivot stand facilitates easy repositioning or moving of the column.

Step	Action
1	Screw in each wheel of the pivot stand fully.
2	Release the brakes.
3	Hold the column by the stand arm (A) and push the column forward.

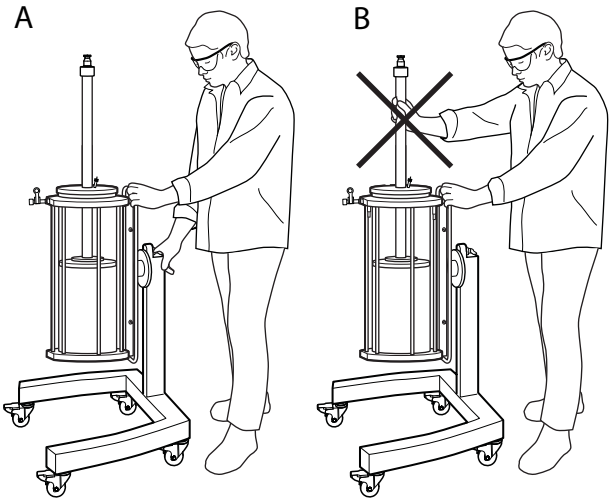

Note:
It is recommended to use the mechanical locking equipment when moving a packed column.

CAUTION
Make sure not to touch the locking equipment for the arm of the pivot stand when moving the column, to avoid injury and rotation of the column.

If transporting the column on the pivot stand without the top plate and adapter fitted, place a centering tool into the opening of the column to secure the tube in place. For correct positioning of the centering tool, see *Reassemble the column tube assembly, on page 225*. After moving the column to its resting position, lock the brakes and level the column (see below).

5.3 Level the column on a pivot stand

In this section

5.3.1 Level a 50-100 column on a pivot stand

If the column is on a pivot stand, it must be leveled before operation. There are three adjustment points shown in the illustration below, 'a', 'b' and 'c'. The first is the adjustment screw 'a' under the stand between the wheels, 'w'. This enables levelling in the 'X' direction, that is, the tilt of the whole back section between the wheels. The other two points are the adjustable feet ('b' and 'c') at the front of the stand and allow levelling in the 'Y' direction.

Step	Action
1	Screw in 'a', 'b' and 'c' as far as they will go.

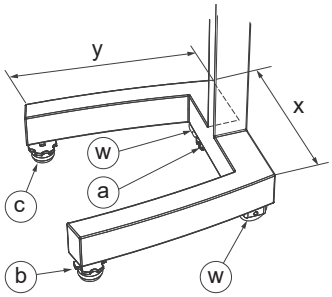

2	Place a spirit level in the 'X' direction on top of the column.
3	Adjust 'a' until 'X' is level. ***Note:*** *If the surface under the column is sloping, make sure that both wheels ('w') are in contact with the surface while adjusting 'a'.*
4	Place the spirit level in the 'Y' direction above the column.
5	Adjust "b" until 'Y' is level.
6	Adjust 'c' until it comes into contact with the surface on which the column is placed.
7	Recheck that the column is level in the 'X' plane.

CAUTION
Do not climb onto the pivot stand. The pivot stand might tip and cause injury or damage.

Step	Action
	CAUTION Lock the wheels to avoid movement of the pivot stand that might cause injury or damage.
	CAUTION Be careful not to unscrew the feet too far. If they are unscrewed totally, the column might fall and cause damage.

5.3.2 Level a 140-200 column on a pivot stand

The column must be leveled before operation. There are four points that can be adjusted to achieve leveling, i.e. all four wheels. The wheels 'a' and 'b' at the back of the pivot stand enable leveling in the 'X' direction. The other two wheels 'c' and 'd' at the front of the stand allow for leveling in the 'Y' direction. During the leveling of the column, the brakes must be locked on all wheels except for the one being adjusted.

Step	Action
1	Lock the brakes on all wheels except for the one being adjusted.
2	Use a wrench key (24 mm) and screw in 'a', 'b', 'c' and 'd' as far as they will go.

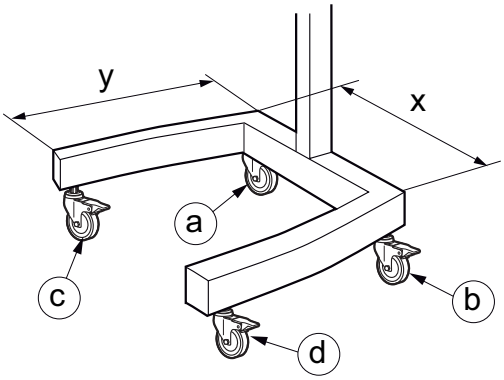

3	Place a spirit level in the 'X' direction on top of the column.
4	Adjust 'a' or 'b' until 'X' is level.

Note:
The wheels can be unscrewed 160 mm before they are totally loosened. Never adjust any wheel further out and keep the distance as short as possible.

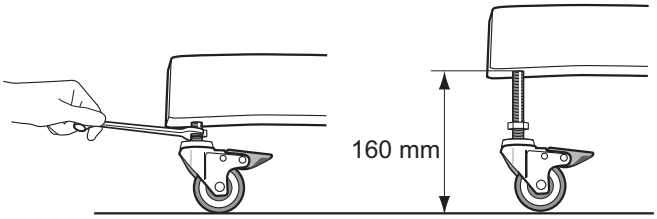

5	Place the spirit level in the 'Y' direction above the column.
6	Adjust 'c' or 'd' until 'Y' is level.

Step	Action
7	Adjust the other of 'c' or 'd' which was not adjusted in step 5 until it comes into contact with the surface on which the column is placed.
8	Secure each wheel with the locking nut, using a wrench key.

CAUTION
Be careful not to unscrew the wheels too far. If they are unscrewed totally the column might fall and cause injury or damage.

CAUTION
Lock the wheels to avoid movement of the pivot stand that might cause injury or damage.

CAUTION
Do not climb onto the pivot stand. The pivot stand might tip and cause injury or damage.

5.4 Clean the column

Cytiva recommends that the outside of the column is cleaned with, for example water and/or 20% (v/v) ethanol to remove any surface residues acquired during removal from the packaging.

Before use, carefully pump 1.0 M NaOH into the column, empty, and then pump a washing liquid, for example water, through the column to make sure that all inner surfaces are clean.

5.5 Fit the top plate and adapter

In this section

5.5.1 AxiChrom 50-100

The following procedure is used to fit the top plate [803] and adapter [A] to the column.

Step	Action
1	Prime the adapter and bottom bed supports, see *Section 6.3.2 Prime a column with stainless steel bed supports, on page 101*.
2	Fill the column with an appropriate liquid or slurry up to the start of the glass incline of the column tube.
	NOTICE To avoid corrosion, make sure not to over-fill or spill salt containing liquid onto metal components. If spillage or over-filling occurs, remove the excess and rinse the top bayonet/top flange with plenty of water before continuing this procedure.
3	Dampen the adapter rod [802] using a cloth wetted with 20% (v/v) ethanol.
4	Carefully slide the top plate [803] up or down the adapter rod so that it is about 10 cm from the adapter. Grip the adapter rod with one hand on each side of the top plate.

Step	Action
5	Carefully insert the adapter into the column tube opening at an angle so that the adapter enters into the liquid or slurry and down into the column tube without trapping air bubbles, see the illustration below.

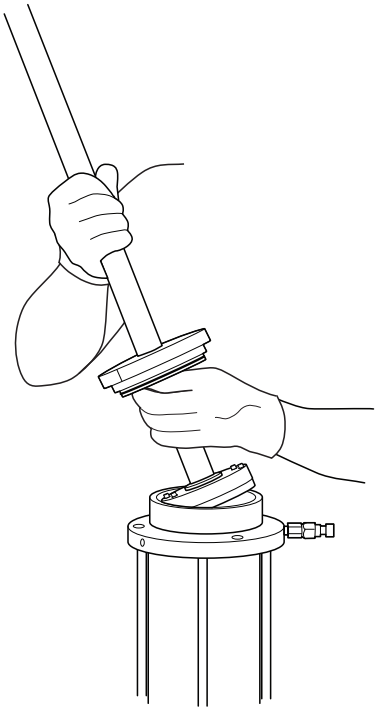

Note:
Rest the adapter on the tube chamfering when the lid is closed with the bayonet tools. If the adapter weight needs to be held by the operator the adapter is not low enough. It is important that the adapter rests on the chamfering to be certain that the adapter starts to move downwards when pumping liquid into the hydraulic chamber.

CAUTION
When handling the adapter and top plate assembly, make sure that fingers or hands are not caught between the top plate and the adapter or top plate and top bayonet/top flange when the top plate slides down the adapter rod.

Step	Action
	CAUTION To avoid use of excessive force and risk of trapping fingers, lubricate the adapter rod with 20% (v/v) ethanol to make sure that the top plate can move smoothly.
	CAUTION Beware when handling the sharp edges of the bayonet threads.
	NOTICE Insert the adapter into the top of the column at an angle, to avoid damage to the glass tube and to avoid trapping air under the adapter bed support.
	NOTICE Always wear gloves when handling the adapter rod to avoid fat from unprotected fingers and scratching the sealing surface.
	NOTICE If there is slurry in the column, to avoid damage to the scraper, make sure that there is a clear head of liquid 1-2 cm above the top surface of the settling slurry before inserting the adapter into the column tube.
	NOTICE Never force the adapter into the column manually. Only use hydraulic pressure as described in this Operating Instructions to move the adapter in the column tube.
6	Align the hole for the bayonet tool on the top plate with the furthest-right machined mark at the top of the bayonet [804].

Step	Action
7	Insert one of the bayonet tools into the hole on the top plate, and the other tool into the hole on the top bayonet.

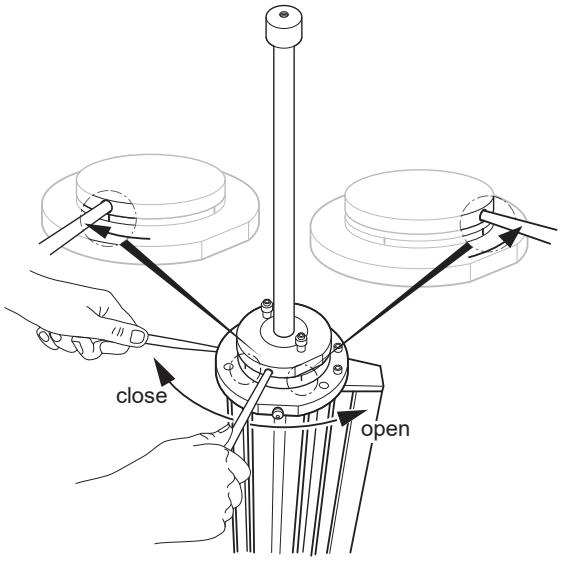

WARNING
Make sure that the top plate is completely closed by confirming that the tool in the top plate is aligned with the machined mark on the top bayonet.

8	Hold the tool still in the top bayonet while carefully moving the tool in the top plate clockwise to tighten the top plate in place. When closed the tool should be aligned with the machined mark at the left.

5.5.2 AxiChrom 140-200

The following procedure is used to fit the top plate [803] and adapter [A] to the column.

Step	Action
1	Prime the adapter and bottom bed supports, see *Section 6.3.2 Prime a column with stainless steel bed supports, on page 101*.
2	Fill the column with an appropriate liquid or slurry up to the start of the glass incline of the column tube.

NOTICE
To avoid corrosion, make sure not to spill salt containing liquid onto metal components. If spillage or over-filling occurs, remove the excess and rinse the top bayonet/top flange with plenty of water before continuing this procedure.

3	Dampen the adapter rod [802] using a cloth wetted with 20% (v/v) ethanol.
4	Carefully slide the top plate [803] up or down the adapter rod so that it is about 10 cm from the adapter. Grip the adapter rod with one hand on each side of the top plate.

Step	Action
5	Carefully insert the adapter into the column tube opening at an angle so that the adapter enters into the liquid or slurry and down into the column tube without trapping air bubbles.

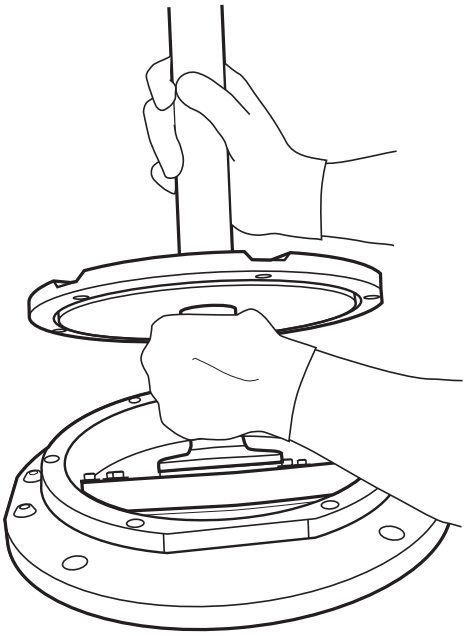

CAUTION
When handling the adapter and top plate assembly, make sure that fingers or hands are not caught between the top plate and the adapter or top plate and top bayonet/top flange when the top plate slides down the adapter rod.

CAUTION
To avoid use of excessive force and risk of trapping fingers, lubricate the adapter rod with 20% (v/v) ethanol to make sure that the top plate can move smoothly.

CAUTION
Take care when handling the sharp edges of the bayonet threads.

Step	Action

NOTICE
Insert the adapter into the top of the column at an angle, to avoid damage to the glass tube and to avoid trapping air under the adapter bed support.

NOTICE
Always wear gloves when handling the adapter rod to avoid fat from unprotected fingers and scratching the sealing surface.

NOTICE
If there is slurry in the column, to avoid damage to the scraper, make sure that there is a clear head of liquid 1-2 cm above the top surface of the settling slurry before inserting the adapter into the column tube.

NOTICE
Never force the adapter into the column manually. Only use hydraulic pressure as described in these Operating Instructions to move the adapter in the column tube.

6 Hold the adapter in place and align the machined mark on the top plate with the machined mark at the top flange [804], before the top plate comes in contact with the top flange.

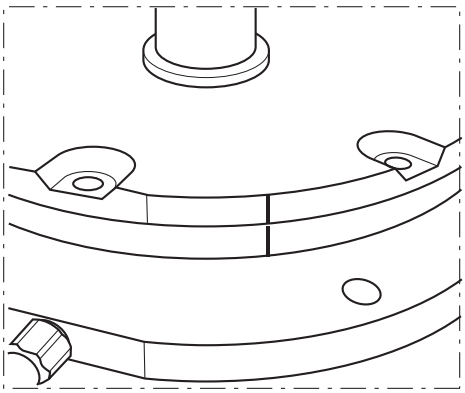

Step	Action
	NOTICE Never rotate the top plate while resting it against the top flange, to avoid damaging the O-ring which seals the top plate to the top flange.
7	Fit the holes in the top plate with the holes in the top flange.
8	Tighten the six bolts [808] crosswise and a little at a time to secure the top plate in place.
	NOTICE Make sure that the top plate is completely aligned before the bolts are tightened. Secure with a wrench but do not overtighten.

5.6 Move the adapter in the column

The following procedures explain how to move the adapter downwards and upwards in the column for routine procedures such as emptying and cleaning.

Note: *The following procedures are general for the movement of the adapter and shall not be applied to packing and unpacking procedures. Instead see the appropriate descriptions in Chapter Chapter 6 Operation, on page 93.*

CAUTION

High pressure. Never move the adapter in a column while mechanical locking equipment is fitted. Remove the mechanical locking equipment first.

CAUTION

Do not climb on the adaptor when moving it, as this may cause it to overturn.

NOTICE

Never force the adapter into the column manually. Only use hydraulic pressure as described in these Operating Instructions to move the adapter in the column tube.

In this section

5.6.1 Limitation of adapter movement in the long column tube

The length of the adapter rod in a long column tube is designed for packing bed heights from 30 cm to 50 cm. The adapter rod length is insufficient to allow adapter movement much below a 30 cm packing height. If the adapter moves too far into the column the pressure is automatically reduced in the hydraulic chamber thus preventing further downward movement of the adapter. This reduction in pressure is facilitated by a groove at the top of the adapter rod, which when entering the column through the top plate of the column allows a leakage through the O-rings at the groove. If the leakage occurs, move the adapter upwards in the column until the groove is visible outside the column and the hydraulic chamber will become sealed once again.

CAUTION

Risk of leakage. Take proper precautions for personal protection and surrounding equipment.

5.6.2 Move the adapter downwards in the column

For 50-200 columns

Movement of the adapter downwards in the column in non-packing operations is done as follows:

Step	Action
1	Open the bottom mobile phase inlet/outlet in the bottom plate and connect a tubing from this outlet to waste.
2	Make sure that the inlets/outlets in the top plate, including the top mobile phase in the adapter rod, are sealed.
3	Connect one end of a tubing to the hydraulic chamber inlet on the side of the top bayonet/top flange. Connect the other end of the tubing to a system or pump.
4	Pump in hydraulic liquid (typically 20% (v/v) ethanol or 0.01 M NaOH), at a slow flow rate to begin with, while at the same time checking the pressure. Increase the flow rate as appropriate while maintaining a low column pressure. Do not run the adapter faster than 120 cm/h, to avoid damage to the adapter scraper seal.
5	When the adapter has reached the desired height, turn off the pump.

5.6.3 Move the adapter upwards in the column

For 50-100 columns

Step	Action
1	Remove the mechanical locking, if fitted.
2	Release the pressure from the hydraulic chamber, see *Section 6.2.2 Release pressure from the hydraulic chamber, on page 97*.
	CAUTION If the hydraulic chamber vent valve is opened while having pressure in the hydraulic chamber liquid will spray out. Take necessary precautions to avoid personal injury or damage on equipment.
3	Make sure that the top mobile phase inlet/outlet and the hydraulic vent valve are closed.
4	Attach one end of a tubing to the hydraulic chamber outlet and the other end of the tubing to waste.
5	Connect one end of a tubing to the bottom mobile phase in the bottom plate. Connect the other end of the tubing to a system or pump.
6	At a low flow rate, pump an appropriate liquid into the process chamber. Make sure that the pressure does not rise above the pressure limits of the column or resin.
7	Increase the flow rate as appropriate while maintaining a low column pressure. To avoid damage to the adapter scraper seal, do not run the adapter faster than 120 cm/h.
8	• If the adapter is not to be moved to its upper position, stop the pump when the adapter has reached the desired height. • If the adapter is to be moved to its most upper position in the column, reduce the flow rate when approaching the top position. Stop the pump when the lower surface of the adapter is 2 cm below the lower surface of the top bayonet to facilitate safe removal of the liquid above the adapter.
9	Make sure that the hydraulic chamber outlet and/or the hydraulic chamber vent valve are opened.
10	Make sure that the column is depressurized.

Step	Action
11	Insert a bayonet tool into each of the holes on the top plate [803] and top bayonet [804].
12	Hold the tool still that is in the top bayonet and move the tool in the top plate counterclockwise to unscrew the bayonet fitting, see *Section 5.7 Remove the top plate and adapter, on page 90*.

CAUTION
Make sure that the adapter is stable in the top of the column or hold the adapter in an upright position.

13	Dampen the adapter rod [802] using a cloth wetted with 20% (v/v) ethanol and carefully slide the top plate approximately 15 cm up the adapter rod while keeping the adapter in place.

CAUTION
Take care when handling the sharp edges of the bayonet threads.

NOTICE
Never force the adapter out from the column manually. Only use hydraulic pressure as described in this Operating Instructions to move the adapter in the column tube.

14	Use a syringe to remove the remaining hydraulic liquid above the adapter in the column.

NOTICE
Always wear gloves when handling the adapter rod to avoid fat from unprotected fingers and scratching the sealing surface.

15	Rinse the space above the adapter with distilled water, remove with a syringe and discard.
16	Carefully lower the top plate and close it using the bayonet tools.

Step	Action
17	Pump the adapter to its upper position. A sudden pressure drop indicates that the adapter has passed the beveling at the top of the (glass) tube. By then the adapter has come loose from the column tube and can be removed, see *Section 5.7 Remove the top plate and adapter, on page 90*. **CAUTION** When handling the adapter and top plate assembly, make sure that fingers or hands are not caught in between the top plate and the adapter when the top plate slides down the adapter rod.

For 140 and 200 columns

Step	Action
1	Remove the mechanical locking, if fitted.
2	Release the pressure from the hydraulic chamber, see *Section 6.2.2 Release pressure from the hydraulic chamber, on page 97*. **CAUTION** If the hydraulic chamber vent valve is opened while having pressure in the hydraulic chamber liquid will spray out. Take necessary precautions to avoid personal injury or damage on equipment.
3	Make sure that the top mobile phase inlet/outlet and the hydraulic vent valve are closed.
4	Attach one end of a tubing to the hydraulic chamber outlet and the other end of the tubing to waste.
5	Connect one end of a tubing to the bottom mobile phase position in the bottom plate. Connect the other end of the tubing to a system or pump.
6	At a low flow rate, pump an appropriate liquid into the process chamber. Make sure that the pressure does not rise above the pressure limits of the column or the resin.
7	Increase the flow rate as appropriate while maintaining a low column pressure. To avoid damage to the adapter scraper seal, do not run the adapter faster than 120 cm/h.

Step	Action
8	• If the adapter is not to be moved to its upper position, stop the pump when the adapter has reached the desired height. • If the adapter is to be moved to its most upper position in the column, reduce the flow rate when approaching the top position. Stop the pump when the lower surface of the adapter is 3 cm below the lower surface of the top bayonet to facilitate safe removal of the liquid above the adapter.
9	Unscrew the six screws [808] to separate the top plate [803] from the top flange [804].
10	Dampen the adapter rod [802] using a cloth wetted with 20% (v/v) ethanol before raising the top plate and inserting the distance pin to separate the adapter from the top plate.

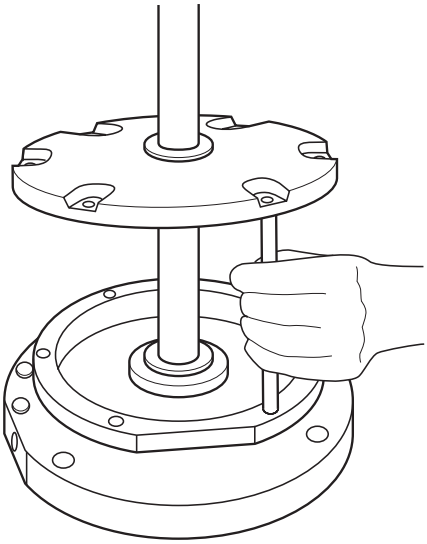

11	Remove remaining hydraulic chamber liquid.

Step	Action
12	Remove the distance pin, close the top plate, and pump the adapter to its upper position. A sudden pressure decrease indicates that the adapter has passed the beveling at the top of the (glass) tube. By then the adapter has come loose from the column tube and can be removed, see (*Section 5.7 Remove the top plate and adapter, on page 90*). If the adapter is not to be moved to its upper position, stop the pump when the adapter has reached the desired height. **CAUTION** When handling the adapter and top plate assembly, make sure that fingers or hands are not caught in between the top plate and the adapter when the top plate slides down the adapter rod.

5.7 Remove the top plate and adapter

AxiChrom 50-100 columns

WARNING
Always depressurize the column before attempting to remove the adapter.

The following procedure is used to remove the top plate and adapter [A] from the column using the bayonet tools.

Step	Action
1	Make sure that the adapter is in the topmost position by pumping liquid upflow into the process chamber, see *Section 5.6 Move the adapter in the column, on page 82*.
2	Make sure that the hydraulic chamber outlet and/or the hydraulic chamber vent valve are opened.
3	Make sure that the column is depressurized.
4	Insert a bayonet tool into each of the holes on the top plate [803] and top bayonet [804].
5	Make sure that the tool in the top bayonet is not moving, and move the tool in the top plate counterclockwise to unscrew the bayonet fitting.

CAUTION
Make sure that the adapter is stable in the column or hold the adapter in an upright position.

6	Dampen the adapter rod [802] using a cloth wetted with 20% (v/v) ethanol and carefully slide the top plate approximately 15 cm up the adapter rod while keeping the adapter in place.

CAUTION
Take care when handling the sharp edges of the bayonet threads.

Step	Action
	NOTICE Never force the adapter out from the column manually. Only use hydraulic pressure as described in these Operating Instructions to move the adapter in the column tube.
7	Carefully lift out the adapter and keep it over the opening of the column tube. If there is resin in the column, rinse residual resin from the adapter back into the column with packing liquid.
8	Carefully place the top plate and adapter on a flat surface.

AxiChrom 140-200

The following procedure is used to remove the top plate and adapter [A] from the column.

WARNING
Always depressurize the column before attempting to remove the adapter.

Step	Action
1	Pump liquid upflow until the adapter is in the topmost position, (see fel ref: Moving the adapter in the column *Section 5.6 Move the adapter in the column, on page 82*.
2	Make sure that the hydraulic chamber outlet and/or the hydraulic chamber vent valve are opened.
3	Unscrew the six screws [808] to separate the top plate [803] from the top flange [804].
	NOTICE Make sure that the adapter is stable on the top of the column or hold the adapter in an upright position.

Step	Action
4	Spray 20% (v/v) ethanol onto the base of the adapter rod as lubrication and carefully slide the top plate approximately 15 cm up the adapter rod while keeping the adapter in place.
	NOTICE Never force the adapter out from the column manually. Only use hydraulic pressure as described in this Operating Instructions to move the adapter in the column tube.
	NOTICE Always wear gloves when handling the adapter rod to avoid fat from unprotected fingers and scratching of the sealing surface.
5	Tilt and carefully lift out the adapter and keep it over the top opening of the column tube. If there is resin in the column, squirt a small volume of packing liquid onto the adapter to rinse residual resin back into the column.
6	Carefully place the top plate and adapter somewhere safe, for example hanging in the adapter holder.

6 Operation

About this chapter

This chapter gives instructions on how to safely operate the product.

In this chapter

6.1 Safety precautions

Read the complete chapter before using the column.

WARNING

Inspect the column before start and replace any damaged parts, e.g. tubing, connectors or O-rings.

WARNING

Thoroughly check the glass column tube to make sure that it is not cracked or has been severely scratched. Pay extra attention to the end parts of the column tube. Etches or frosted glass, or small cracks or damages to the column can cause the column to burst and may cause serious injury if a column with damages is pressurized.

CAUTION

Remove any spillage on the floor immediately to minimize the risk for slipping accidents.

Note: *Perform a leakage test at the start of the process. This will make it possible to detect leakage at an early stage with minimized consequences and the risk for potential leakage of hazardous liquids is diminished.*

Note: *Before packing the column, pump 1.0 M NaOH through the column, empty the column, and then pump, for example purified water through the column to make sure that all inner surfaces are clean.*

Note: *For AxiChrom 50-100 columns, the adapter rod attachment to the adapter may loosen after a period of use. The tightness shall be checked at regular intervals and be retightened when appropriate.*

6.2 Overpressure situation

WARNING
Never exceed the maximum rated pressure for the column. Be aware that the column has a 'packing pressure' and an 'operating pressure'. For details of packing and operating pressure, refer to *Section 9.1 Specifications, on page 252*.

WARNING
Always perform a pressure test before use.

WARNING
Always make sure that there is no overpressure in the column before a part is loosened.

CAUTION
Install a high pressure safety device on the hydraulics and make sure that there is a free flow path when pumping fluid.

In this section

6.2.1 Release over-pressure in the process chamber

If the pressure exceeds the maximal design pressure and rupture discs are not installed, follow this procedure:

Step	Action
1	Stop the pump.
2	Alert people in the room that the column is over-pressurized.
3	Monitor the pressure.
4	Take all necessary safety precautions before depressurizing the column.
5	Try to release the pressure by opening the flow path through the column using the system software. If this is not possible, loosen the tube connected to the adapter at the pump side at least 1.5 meters from the column to allow the column to depressurize.
6	Check the column for any signs of damage and replace damaged parts (adapter seal, O-rings, glass tube, etc.).

6.2.2 Release pressure from the hydraulic chamber

CAUTION

If the hydraulic chamber vent valve is opened while there is pressure in the hydraulic chamber, liquid will spray out. Take the necessary precautions to avoid personal injury or damage to equipment.

If it is necessary to release pressure from the hydraulic chamber this shall be done using the hydraulic chamber vent valve [107]. To avoid being sprayed when opening the hydraulic chamber vent valve, use the following precautions:

Step	Action
1	Push a syringe with a plunger in its bottom position into the hydraulic chamber vent valve [107] and hold it in place.
2	Open the hydraulic chamber vent valve and collect the liquid in the syringe until the excess pressure in the hydraulic chamber is normalized. ***Note:*** *Do not touch the syringe plunger during this step.* *If the syringe fills up before the pressure has normalized, close the valve, discard the contents of the syringe and repeat from step 1.*

6.3 Packing preparations

In this section

6.3.1 Prepare the slurry

Before filling the column, it is necessary to calculate the volume of slurry needed to achieve the target bed height. The ***Intelligent Packing*** wizard/phases in UNICORN calculates the slurry volume needed based on parameters selected in the wizard/phases. The slurry concentration is needed for the calculation.

Note: *Slurry volumes presented in the wizard/phases assume that the resin is suspended in 20% (v/v) ethanol. Any other buffer will not give an accurate calculation of slurry concentration according to the recipe.*

Note: *The achieved bed height may differ slightly from the target bed height due to, for example how accurately the slurry concentration was measured and the actual volume added to the column.*

Note: *The volume of slurry may not exceed the volume capacity of the column.*

The characteristics and operating recommendations for individual resin are described in their specific instructions.

Measure the slurry concentration

To measure the slurry concentration:

Step	Action
1	Gently shake the container with the resin in 20% (v/v) ethanol until homogeneous.
2	Quickly remove the lid of the container and pour the contents into a graduated cylinder.
3	Cover the cylinder with clinging film to minimize evaporation.
4	Place the cylinder on a flat surface.
5	Let the resin settle overnight for a bead size of about 90 µm, and for at least 48 hours for a bead size of less than 50 µm. ***Note:*** *Some resin might need more than 48 hours to settle completely.*
6	Read the volume ratio of sedimented resin. The slurry concentration in new containers of resin is approximately 70% (v/v).

Replace the storage solution

Before packing, replace the storage liquid with a suitable packing liquid. This can be done by one of the following procedures:

- Decant the storage liquid from the top of the settled resin, add the packing liquid and gently mix. Repeat the decanting step several times, or;

- Pack the column with resin, wash with several column volumes of the packing liquid, and repack the column, or;
- Filter smaller volumes of resin using a vacuum filtration system with a glass filter funnel.

Note: *All S and SP ligand resins are shipped and supplied in 0.2 M sodium acetate and 20% ethanol. Any decanted solution will contain salt.*

Slurry volume

The method wizard/phase calculates and presents the needed slurry volume in the wizard summary page/ intelligent packing phase according to the following formula:

$$\text{Slurry volume} = \frac{\text{Target bed height x PF x Column cross sectional area x SVF}}{\text{Slurry concentration}}$$

where the Slurry Volume Factor (SVF) is a compensation factor for the difference between a gravity settled bed height and a consolidated bed height, and PF is the Packing Factor, see *Section 3.4.3 Definitions associated with the Packing Factor, on page 28*.

The SVF is valid for slurry concentration measurements performed with resin in 20% ethanol and beds packed with the packing solution suggested in the wizard summary page. If the packing solution used is different from the packing solution recommended in the wizard summary page, or if a custom resin choice is made, the SVF needs to be estimated by the user. This is done by repeated comparisons of the gravity settled bed in a cylinder with the achieved packed bed height in the preferred packing liquid.

6.3.2 Prime a column with stainless steel bed supports

These instructions apply only to columns with stainless steel bed supports. Instructions for columns with plastic bed supports are given in section *Section 6.3.3 Wet the plastic bed supports, on page 103*.

NOTICE

Make sure that the tubing is of sufficient length to be able to reach the top mobile phase inlet/outlet.

Note: *Place the column close to the system before priming the column so that it can be tilted/rotated/emptied without disconnecting the bottom tubing.*

Step	Action
1	Make sure that the column has been cleaned and prepared for a run (see *Section 5.4 Clean the column, on page 72*).
2	Make sure that the pressure alarm is active.
3	**For AxiChrom 50-100 columns:** pump packing liquid at high flow velocity upflow into the column using a manual command. **For AxiChrom 140 and 200 columns:** pump packing liquid at high flow velocity (e.g. ManFlow 100% in an ÄKTAprocess 6 mm system or 800 mL/min with an ÄKTA pilot 600 system using both pump A and pump B) upflow into the column.
4	Maintain the flow until the bed support in the bottom plate is covered and stops producing air bubbles. Start and stop the flow several times. Gently tap the column and shake the tubing while flowing packing liquid into the column to help free the air bubbles. Drain the column through the bottom phase inlet until 1 cm of liquid remains at the bottom of the column. Repeat the procedure once.
5	Hold the adapter with the bed support facing upwards and pump packing liquid at high flow velocities through the top mobile phase inlet/outlet and out through the bed support until no air bubbles emerge. Start and stop the flow several times. Shake the tubing while flowing packing liquid into the column to help free air bubbles. ***Note:*** *For **For 140 and 200 columns:** It is recommended to hang the adapter in the adapter holder (see Section 4.4 Adapter holder for 140-200 columns, on page 44) during priming to facilitate the priming procedure.* For ÄKTA pilot 600, both the A and B pumps can be used to increase flow velocity.

Step	Action
6	For 50-100 columns, or if the adapter holder is not used, place the adapter (bed support downwards) into a container of liquid to prevent air coming into the bed support, adapter and tubing. ***Note:*** *The adapter might need extra support to stand in the container of liquid, for example by leaning it against the wall or another surface.*
7	Stop the flow.

6.3.3 Wet the plastic bed supports

Follow these instructions to wet top and bottom plastic bed supports before packing the column.

NOTICE

Always wear gloves when handling the bed supports and the adapter rod to prevent the transfer of fats and other contaminants from unprotected fingers and scratching of the sealing surface.

Step	Action
1	Before using new plastic bed supports, place them in 20% v/v 1-propanol in an appropriate container for at least 12 hours. Make sure that the bed supports are submerged below the surface of the solution by placing a weight on them.
2	Rinse the bed supports in 20% ethanol and keep them soaked in 20% ethanol until they are mounted in the column.
3	Place the wetted bottom bed support in a new snap ring. Fit the bed support and snap ring assembly onto the bottom distributor and mount on to the column as described in this Operating Instructions.
4	Prime the bottom mobile phase tubing before connecting it to the column.
5	Pump 20% ethanol upflow at a high velocity into the column using a manual command. Maintain the flow until the bed support is covered and no more air is released from the bed support. Start and stop the flow several times. Drain the column until approximately 0.5 cm liquid remains. Repeat until all air is removed.
6	Fit the top distributor on to the adapter. Flush the adapter with 20% ethanol downflow using a manual command before fitting the bed support. Make sure that the adapter and tubing are filled with liquid and free from air. Place the adapter securely on a flat surface.
7	Place the wetted adapter bed support in a new snap ring. Fit the bed support and snap ring assembly onto the distributor as described in this Operating Instruction. Make sure that the bed support is in contact with the distributor all around the circumference.
8	If necessary place the adapter with the bed support downwards into a container of 20% ethanol to prevent air from entering the flowpath.
9	Mount the adapter on to the column as described in this Operating Instructions.

6.3.4 Pour slurry into the column

This section assumes that the column has been primed, see *Section 6.3.2 Prime a column with stainless steel bed supports, on page 101*.

Step	Action
1	Resuspend the slurry in the resin container by gentle shaking until fully homogeneous. ***Note:*** *Make sure that slurry concentration matches that entered into the wizard.*
2	Pour the appropriate volume of resuspended slurry into the column tube. When ***Intelligent Packing wizard*** is used, see ***Column Packing Summary*** for suggested slurry recipe or the method notes. ***Note:*** *Preferably pour the resin slurry against the inner wall of the column tube to minimize air trapped in the slurry. However, do not tilt the column in order to achieve this.*
3	Wash out any remaining resin from the container and pour it into the column.
4	Use the media stirrer to gently agitate the resin in the slurry so that there are no clumps of resin and the slurry is well mixed. Make sure that there is no sedimented resin left at the bottom of the column. ***Note:*** *It might be necessary to lower the level of the slurry in the column tube to accommodate volume displacement by insertion of the media stirrer and additional liquid volume from rinsing.*
5	Add more packing liquid into the column right up to the edge of the glass column tube. Resin stuck on the column wall or in the hydraulic chamber inlet should be flushed down into the resin slurry with packing liquid. Adding too little liquid increases the risk for air bubbles becoming trapped, whereas too much liquid will lead to spillages when the adapter is inserted.

Step	Action
6	Let the column stand undisturbed so that the resin can begin to settle. The speed of settling depends on the resin. Wait until there is a clear head of liquid 1 to 2 cm above the level of the settling resin before inserting the adapter. This reduces the risk of resin being forced up beyond the lower surface of the adapter. Do not wait more than 15 minutes to avoid a size gradient in the bed. **NOTICE** Insert the adapter into the column tube at an angle to make sure that no air is trapped in the column.
7	Fit the adapter and top plate onto the column, see *Section 5.5 Fit the top plate and adapter, on page 73*.

6.4 Intelligent packing of columns

In this section

6.4.1 Introduction

The method wizard/phases in UNICORN contains an ***Intelligent Packing*** option that allows the user to create an ***Intelligent Packing*** method. ***Intelligent Packing*** allows for convenient and precise control of the column packing using columns together with ÄKTA system, UNICORN software, and verified packing methods.

Several Cytiva BioProcess™ resins have been verified for use with AxiChrom columns and ***Intelligent Packing***. These are found in a list of resins in the method wizard/phases for ***Intelligent Packing***.

NOTICE

UNICORN is not considered to be a safety system for the column.

Packing settings

Intelligent Packing methods for BioProcess resins have ***Standard verified packing settings***. This *Operating Instructions* describes the creation of ***Intelligent Packing*** method based on verified BioProcess resin.

Standard verified packing settings is selected by default. The packing settings are prepopulated and locked to provide a complete method with settings verified by Cytiva.

Note: *Default values for variables in the method wizard may be changed to optimize an **Intelligent Packing** method. Changes using the variables page in the **Method Editor** module is for advanced users only.*

Intelligent Packing methods can also be developed using ***Custom packing settings***. The ***Custom packing settings*** allow a wider range of variables to be defined to optimize the method, without the support from Cytiva. Selecting ***Custom packing settings*** unlocks the packing settings and let you define the packing settings yourself. It also allows a wider bed height range, and the possibility to pack to a specific bed height.

The *Operating Instructions* provides general information for how to handle the packing procedures. For more information, read about ***Intelligent Packing*** in the UNICORN help and documentation.

Note: *Make sure that the air trap is filled with mobile phase liquid. The methods created using the **Intelligent Packing** wizard/phase are constructed so that the airtrap is in line with the column when equilibration and testing operations are being performed. These require that flow occurs into the process chamber via the mobile phase inlet/outlet. By contrast, during packing, the method is constructed so that the air trap is bypassed as hydraulic liquid is pumped into the hydraulic chamber of the column.*

6.4.2 Intelligent Packing principle

Intelligent Packing is a system solution using UNICORN-controlled packing of AxiChrom columns with an ÄKTA system. A wizard or a phase is used to select values for essential variables.

The principle of ***Intelligent Packing*** is explained in the illustration below.

UNICORN controls the flow of hydraulic liquid into the hydraulic chamber, which pushes the adapter down from its start position (A) and initiates the consolidation of the bed. The user watches for the exact point when the adapter comes into contact with the consolidated bed surface (B) and clicks on a button in a UNICORN dialog to signal the start of compression. The adapter continues to move downwards and thereby compresses the bed according to the predetermined Packing Factor to obtain the target bed height (C). Compression of the bed causes an increase in the pressure (X). When compression is complete UNICORN stops the flow of hydraulic liquid, for some resins flow conditioning will then start. If selected in the ***Intelligent Packing*** wizard/phase in UNICORN, an evaluation test of the packed bed is automatically performed.

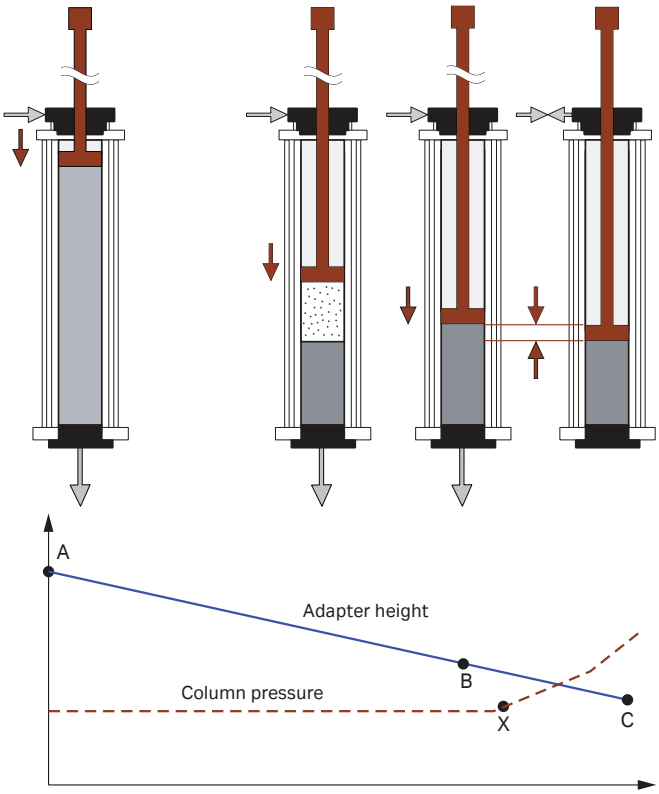

6.4.3 Select Instrument configuration and components

In order to create an ***Intelligent Packing*** method using the UNICORN method wizard or phases it is necessary to have the appropriate ***Instrument Configuration***. For some systems the ***Intelligent Packing*** component types must then be selected in the UNICORN ***components list***.

Example from UNICORN 7:

Step	Action
1	In the ***Tools*** menu of any UNICORN module select ***Administration***.
2	Select ***System Properties***.
3	Select the appropriate system and click on ***Edit***.
4	Select the appropriate ***Instrument configuration***.
5	**For** ÄKTAprocess: Select the check box for ***CIP*** and ***AxiChrom 100-200***.
6	**For** ÄKTAprocess: Click on ***OK*** in ***Edit*** dialog and ***Close*** in ***System Properties*** dialog.

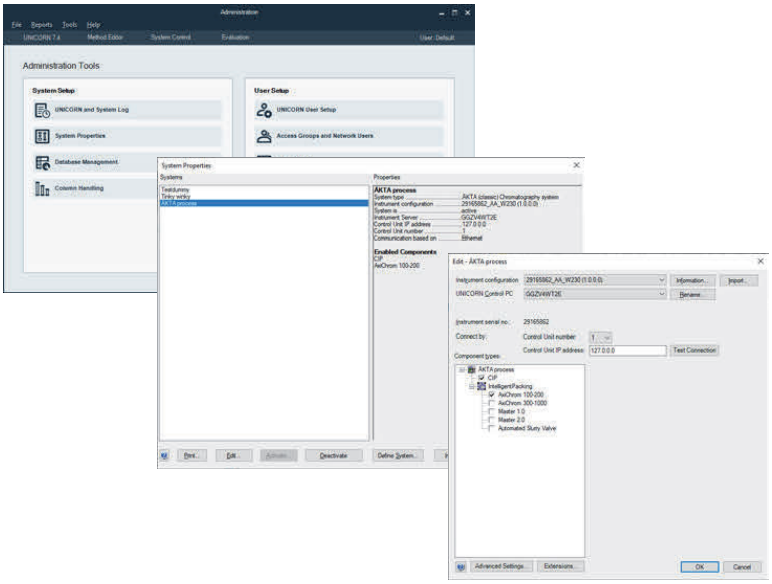

For more information about the latest Instrument Configuration or other software updates visit the product page for that specific ÄKTA system or contact Cytiva sales or customer support.

6.5 Intelligent packing with ÄKTA avant 150

This section contains information that is supplementary to *Section 6.4 Intelligent packing of columns, on page 106*.

In this section

6.5.1 Create a new column type

Introduction

Before creating the ***Intelligent Packing*** method in UNICORN a ***New Column Type*** needs to be created with the ***Column Handling*** tool. This type consist of:

- AxiChrom column hardware
- Resin
- Pressure/flow parameters
- Bed height

For more information on ***Column Handling***, refer to the documentation for your UNICORN software.

Open the Column Handling dialog

To open the ***Column Handling*** dialog:

- select ***Tools*** →***Column Handling...*** in any of the UNICORN modules

  or

- click the ***Column Handling*** icon in the ***Toolbar*** where available

Create a new column type

This procedure describes how to add a new column type with the ***Column Handling*** tool.

Step	Action
1	In the ***Column Type Parameters*** tab in the ***Column Handling*** dialog, click New... .

Step	Action

Result:

The ***New Column Type*** dialog opens.

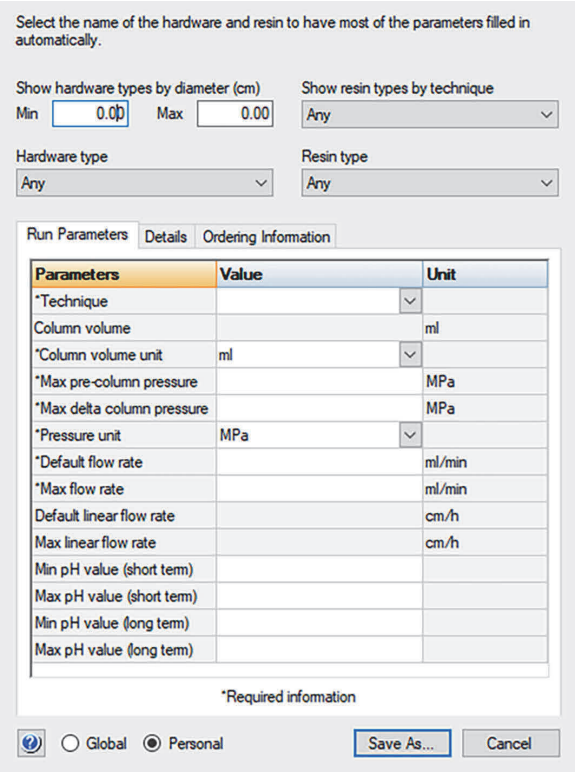

Note:

*The **Intelligent Packing** method is only compatible with AxiChrom columns.*

2 **a.** Select the appropriate AxiChrom hardware in the drop-down list***Hardware type*** for the new column type.

To filter the drop-down list to only show hardware types with certain diameters, enter the diameter range in cm in the ***Min*** and ***Max*** fields for ***Show hardware types by diameter (cm)*** above.

b. Select the ***Resin type*** for the new column type in the drop-down list.

To filter the drop-down list to only show resin types for a specific separation technique, choose the appropriate technique in the ***Show resin types by technique*** drop-down list above.

Step	Action

Result:

The following parameters are automatically filled in (can be edited if appropriate):

Run Parameters

Parameters	Value	Unit
*Technique	Anion Exchange	
Column volume		ml
*Max pre-column pressure	1.0	MPa
*Max delta column pressure		MPa
*Default flow rate		ml/min
*Max flow rate		ml/min
Default linear flow rate		cm/h
Max linear flow rate		cm/h
Min pH value (short term)	2	
Max pH value (short term)	14	
Min pH value (long term)	2	
Max pH value (long term)	12	

Details

Parameters	Value	Unit
*Hardware diameter	5.0	cm
*Bed height		cm
Typical loading range		mg
Total liquid volume (Vt)		ml
Void volume (Vo)		ml
Typical peak width at base		ml
Average particle diameter	90.0	
Molecular weight range		

Ordering Information

Parameters	Value
Name	
Code number	
Medium name	Capto Q
Medium code number	17-5316-02
Hardware name	AxiChrom 50/300 glass, 20 um steel
Hardware code number	See user manual for AxiChrom

3 Enter the remaining parameter values for the new column type in the ***Run Parameters*** and ***Details*** tabs. Fields marked with ***** must be filled in.

Values in the gray fields are calculated and automatically filled in based on entered values for the corresponding parameters.

4 Select whether the the new column type should be ***Global*** (available for all users) or ***Personal*** (only available for the current user).

5 Click ***Save As...*** to save the column type.

Result:

The ***Save As*** dialog opens.

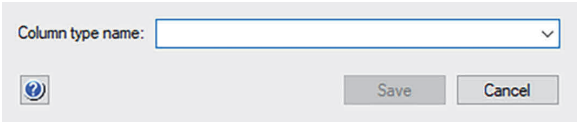

6 Type in a ***Column type name*** and click ***Save.***

Result:

The column type is saved in the database and displayed in the ***Column types*** list.

Note:

If traceability of result is requested, a column individual can be created under column type for logging of the data, see UNICORN Method Manual.

6.5.2 Create a method using Standard verified packing settings

This section describes the creation of an example ***Intelligent Packing*** method based on ***Standard verified packing settings***.

Step	Action
1	Open the ***Method Editor*** module and click on the ***New method*** icon.  *Result:* The ***New Method*** dialog opens.
2	Select ***System*** and ***Predefined Method Intelligent Packing*** in the dialog. Click ***OK***. 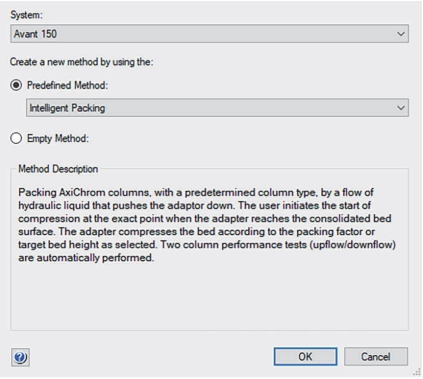 *Result:* The phases included in the chosen method are displayed in the ***Method Phases*** pane to the left, and the default settings for each of the phases are shown in the ***Phase Properties*** pane to the right.
3	In the ***Phase Properties*** pane of the ***Method Settings*** phase, edit general settings like ***Column type*** and ***Method Base Unit***. UNICORN automatically calculates correct settings for volume, flow rate, and pressure limits based on the selected column type. ***Note:*** *Only AxiChrom columns can be selected in order to be able to run the method.* The illustration below shows the ***Method Phases*** pane to the left and the ***Phase Properties*** pane of the ***Method Settings*** phase to the right.

Step	Action

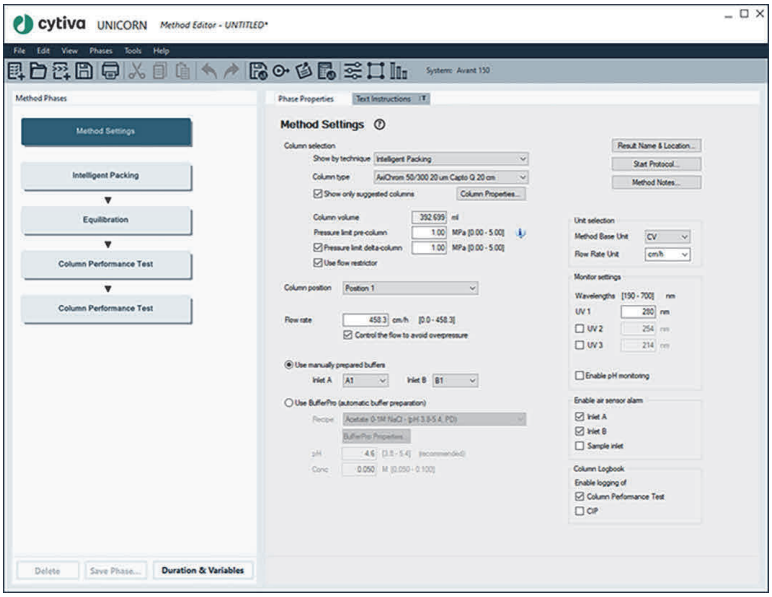

Make sure that all parameter values are correct.

Note:

*If the check box **Column Performance Test** is checked, automatic logging of the result will be saved in the column logbook if a column individual is chosen.*

4 In the ***Phase Properties*** pane of the ***Intelligent Packing*** phase, make sure that the ***Standard verified packing settings*** radio button is clicked. This button should be clicked if an AxiChrom column type with Approved verified resins was chosen in the Method Settings phase. Default parameter values for packing will automatically be filled in into the ***Intelligent Packing*** phase.

The illustration below shows the ***Method Phases*** pane to the left and the ***Phase Properties*** pane of the ***Intelligent Packing*** phase to the right.

Step	Action

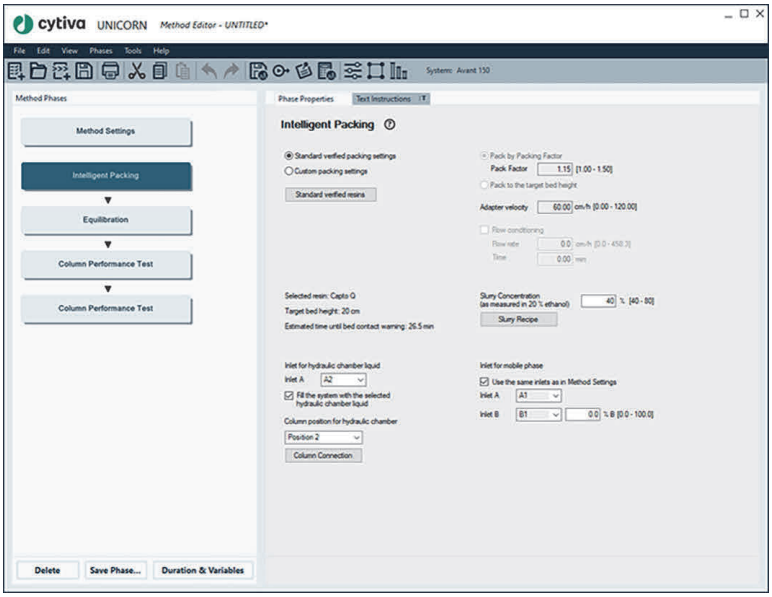

5 In the ***Phase Properties*** pane of the ***Intelligent Packing*** phase, click on the ***Slurry Recipe*** button to receive a calculation of the amount of resin to fill in the column based on the slurry concentration. The recommended packing buffert for the selected resin is also shown in the dialog.

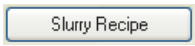

Result:

The ***Suggested Slurry Recipe*** dialog opens.

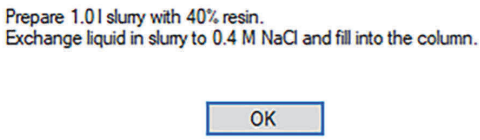

Note:

*The **Slurry Recipe** button is not available in Custom Packing settings.*

Click ***OK*** to close the dialog.

6 In the ***Phase Properties*** pane of the ***Intelligent Packing*** phase, click on the ***Column connection*** button to display an illustration describing how to connect the column to the system.

Step	Action
	Result: The ***How to connect the column to the system*** dialog opens. 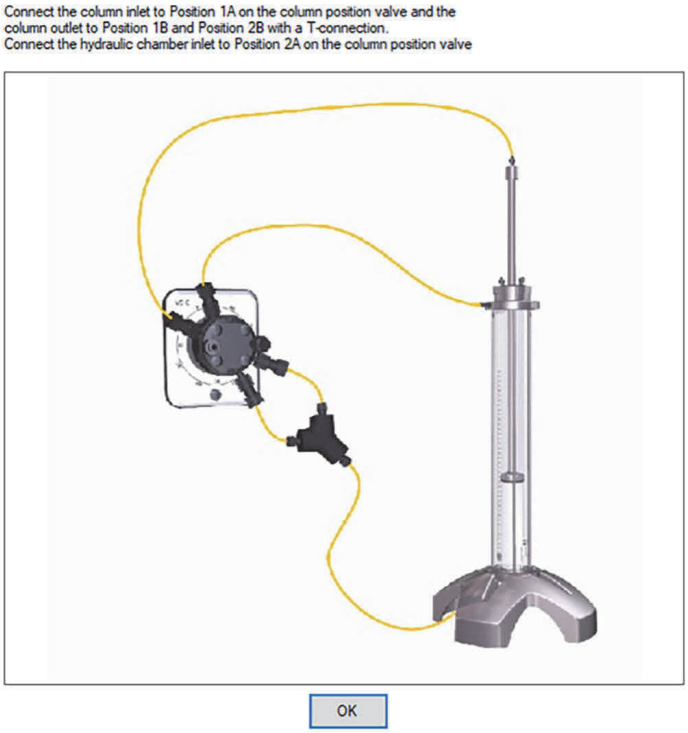 ***Note:*** *The text will be updated dependent on the column positions chosen, but the illustration will remain the same.* Click ***OK*** to close the dialog.
7	In the ***Phase Properties*** pane of the ***Equilibration*** phase, make sure that the settings are correct. The default flow rate is set to 30 cm/h and the total volume of the Equilibration phase is 1.3 column volumes. The illustration below shows the ***Method Phases*** pane to the left and the ***Phase Properties*** pane of the ***Equilibration*** phase to the right.

Step	Action

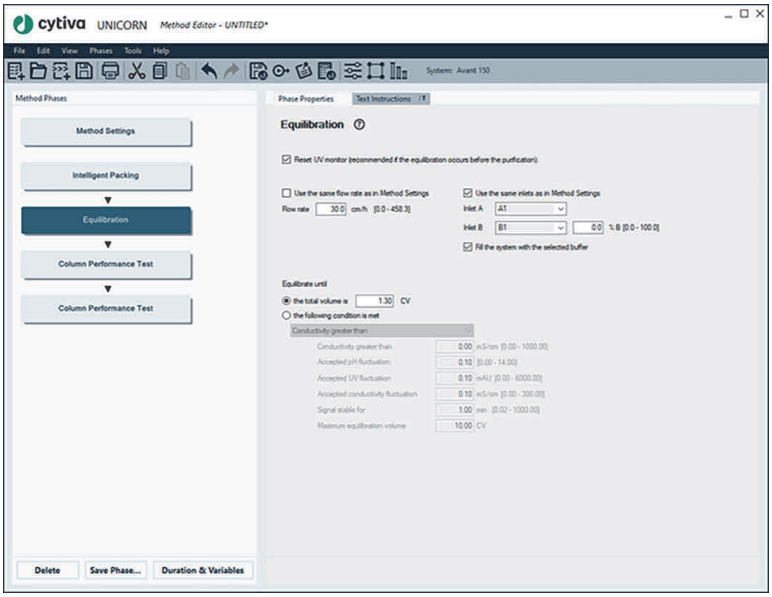

Note:

All parameters in this phase can be changed.

8 In the ***Phase Properties*** pane of the ***Column Performance Test*** phase, make sure that the settings are correct. After the equilibration two Column Performance tests are run, one downflow and one upflow. Make sure that the ***Upflow*** check box is checked in one of the ***Column Performance Test*** phases. The test will then be run upflow. Make sure that the ***Upflow*** check box is unchecked in the other ***Column Performance Test*** phase and this test will be run downflow.

It is not necessary to run the tests, but is recommended to make sure the quality of the packed bed. A solution of either acetone or NaCl can be used to give a good indication of the column packing quality. The eluate is monitored by measuring the UV absorption at 280 nm or the conductivity and the curve can be evaluated in ***Evaluation***, see *Section 6.10 Performance evaluation of the column, on page 155* for more information.

The illustration below shows the ***Method Phases*** pane to the left and the ***Phase Properties*** pane of the ***Column Performance Test*** phase to the right.

Step	Action

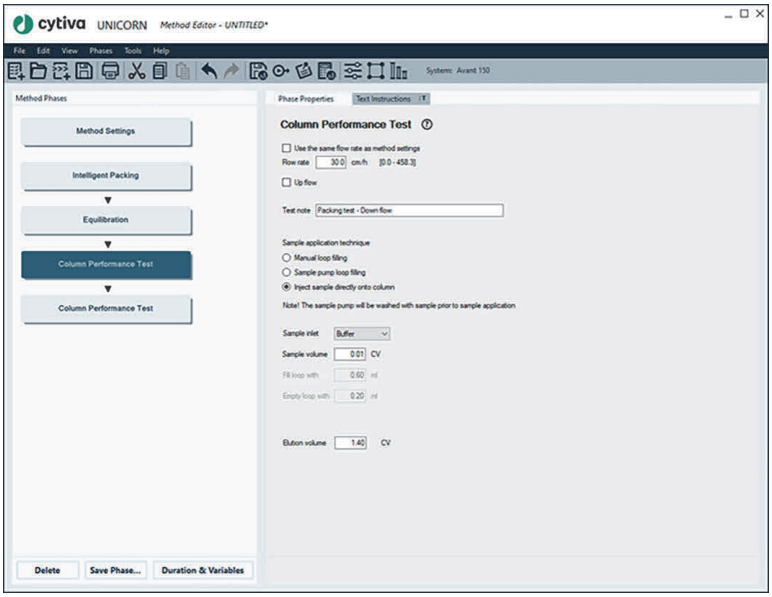

Note:

To check if the test is run upflow or downflow, see the ***Upflow*** *check box. If this is checked, the test is run upflow.*

At both tests the flow rate is set to 30 cm/h. It is important to use a low flow and to use the same flow rate if tests are repeated to get comparable results.

9 Click the ***Save the method*** icon.

Result:

The ***Save As*** dialog opens.

10 In the ***Save As*** dialog:

a. Select a target folder to enable the ***Save*** button.

b. Type a ***Name*** for the method.

c. Select a ***System*** from the list.

d. Click the ***Save*** button.

Result:

The created method is saved in the selected folder.

6.5.3 Create a method using Custom packing settings

Intelligent Packing methods can also be developed using ***Custom packing settings***. This allows you to define the packing settings, but without the support from Cytiva. The ***Custom packing settings*** allow a wider range of variables that may be modified to optimize the method.

The options available for ***Custom packing settings*** are:

- Pack according to a desired Packing Factor or bed height. If selecting the latter option, the user stops the compression when the final bed height has been reached.
- Select flow conditioning with associated variables
- Specify desired adapter velocity during packing within defined range

In the ***Phase Properties*** pane of the ***Intelligent Packing*** phase, make sure that the ***Custom packing settings*** is selected.

NOTICE

Over-compression during packing can damage the resin.

6.6 Intelligent Packing with ÄKTA pilot 600

This section contains information that is supplementary to *Section 6.4 Intelligent packing of columns, on page 106*.

In this section

6.6.1 Introduction

NOTICE

Make sure that the liquid levels in the containers are lower than the system outlet. This is to avoid siphoning flow.

NOTICE

Make sure that the airtrap is filled with mobile phase liquid.

The predefined ***Intelligent Packing*** methods use the **IP** port. When column hardware, bed support, resin, and target bed height has been entered in the method, default values will automatically be set in the method to provide a complete method.

The methods created are designed so that the airtrap is in line with the column when equilibration and testing operations are performed. These require that flow occurs into the process chamber via the mobile phase inlet/outlet. By contrast, during packing, the method is designed so that the air trap is bypassed as hydraulic liquid is pumped into the hydraulic chamber of the column.

Ports and column positions for Intelligent Packing

Connect the column as described in *Section 4.6 Connect the column to the system, on page 49*.

The ***Intelligent Packing*** uses the **IP** port. The illustration below shows an AxiChrom 50 column connected to the **IP** port and the column position **1** ports.

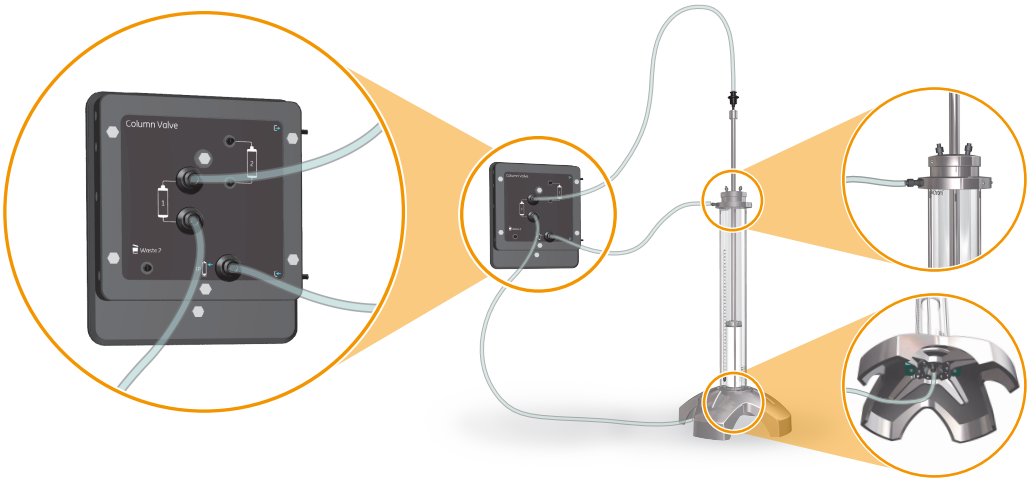
Column Valve

6.6.2 Create a method using Standard verified packing settings

This procedure describes the creation of an ***Intelligent Packing*** method based on ***Standard verified packing settings*** for a BioProcess resin.

Step	Action
1	Open the ***Method Editor*** module in UNICORN and select ***File*** →***New method***. *Result:* The ***New Method*** dialog opens.

Step	Action
2	From ***Predefined Method*** dialog box, select ***Intelligent Packing*** from the ***Predefined Method*** list. Click ***OK***.

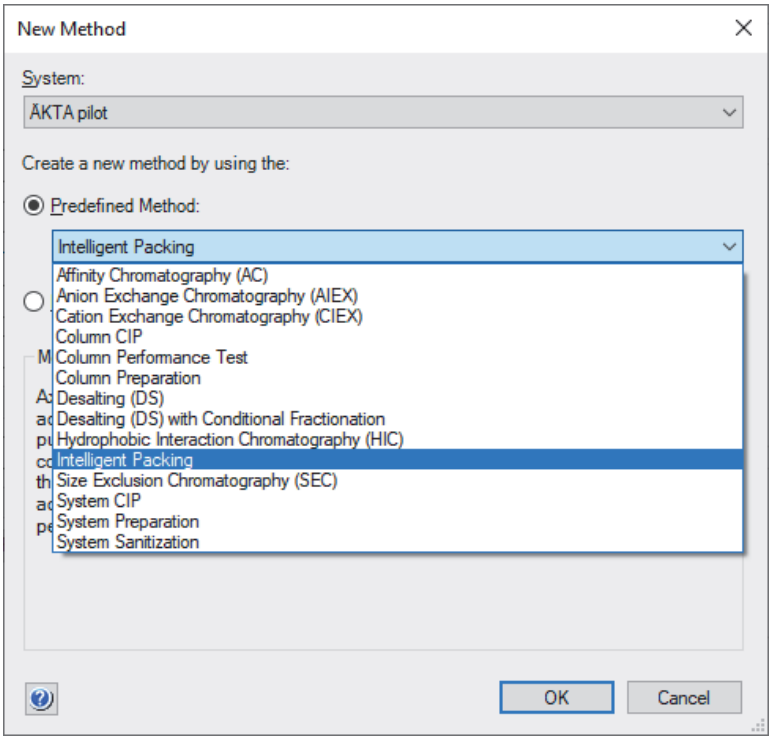

A new method based on the predefined ***Intelligent Packing*** method is created and opened.

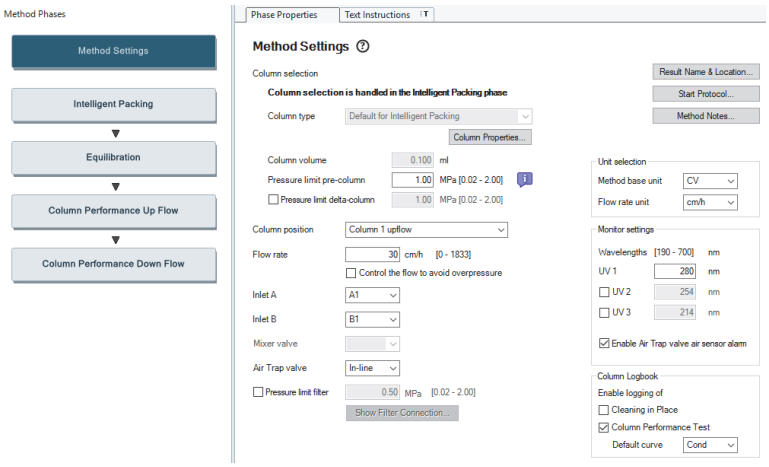

Step	Action
3	Click the ***Method settings*** phase.
4	Set the ***Column position*** and ***Default curve*** for ***Column Performance Test***. The column positions that can be used are: ***Column 1 upflow***, ***Column 1 downflow, Column 2 upflow***, and ***Column 2 downflow***. The up- or downflow selection affects the flow path of the equilibration phase. The ***Default curve*** is used by the automatically evaluation in the ***Evaluation*** module in UNICORN. The automatic evaluation will integrate the selected curve and present assymetry, HETP and plates/meter. ***Result Name & Location*** and other generic settings can also be set in this phase. ***Note:*** *Do not edit the text in **Method Settings** or the **Intelligent Packing** phase of an **Intelligent Packing** method.*
5	Click on the ***Intelligent Packing*** phase and set the following parameters: **a.** ***Column hardware***: Select "AxiChrom xxx/yyy" (xxx = column diameter, yyy = max bed height for short and long column tube, 300 or 500 mm respectively). The column size can be found on a label on the column tube near the bottom flange. **b.** ***Bed support***: Select appropriate bed support type and porosity. The material options are stainless steel and plastic. The porosity choice, 10 or 20 µm, is dependent on the bead size of the resin. **c.** ***Resin***: Select the appropriate resin. **d.** ***Target bed height***: Enter a value within the designated range. 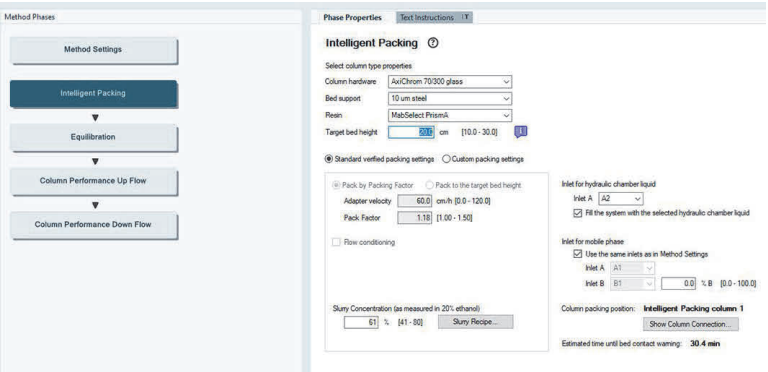 *Result:* ***Standard verified packing settings*** is selected by default. The packing settings are prepopulated and locked to provide a complete method with settings verified by Cytiva.

Step	Action
	Tip: *Enter the slurry concentration and click **Slurry Recipe** to get a calculated slurry recipe to give your target bed height.*
6	Set the inlets for hydraulic chamber liquid and mobile phase. ***Tip:*** *Click **Show Column Connection** for an illustration of the column connections and for a time estimation.*

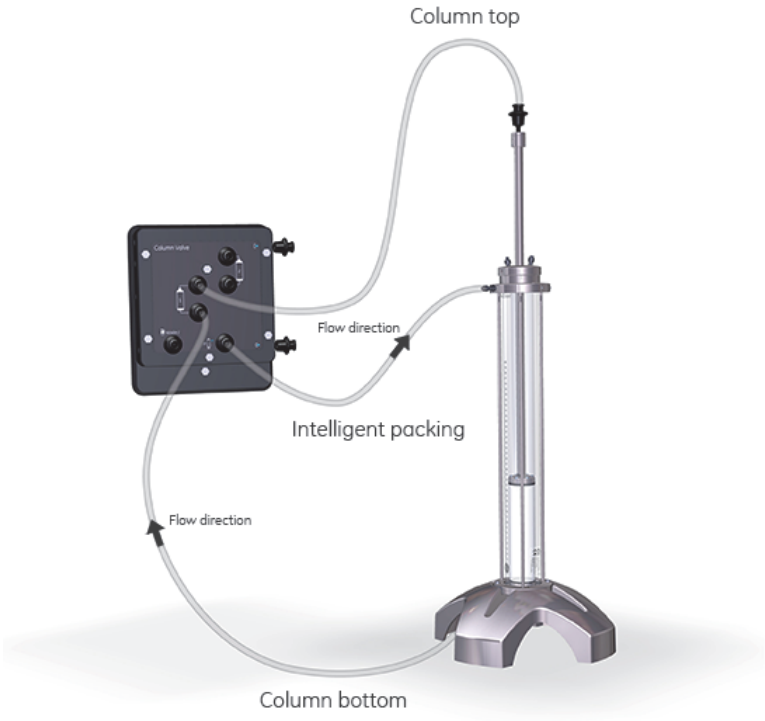

Step	Action
7	Click the ***Equilibration*** phase and set equilibration volume and flow rate. The flow direction is the same as set in the ***Method settings*** phase.

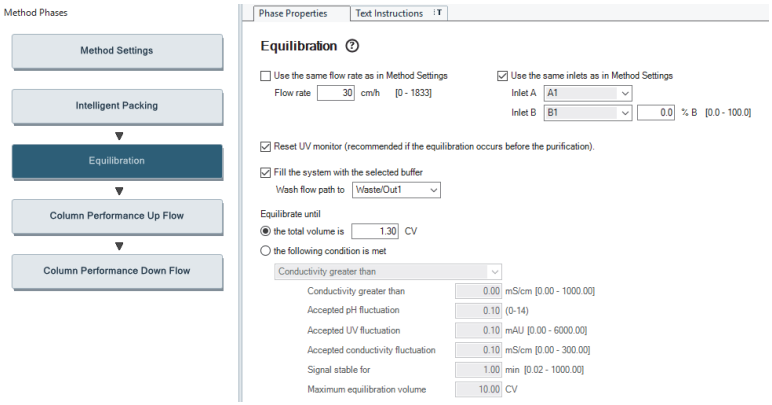

8	Click the ***Column Performance Up Flow*** and ***Column Performance Down Flow***. Set the following parameters: ***Flow rate***, ***Test note***, ***Test solution inlet***, ***Test solution volume***, and ***Elution volume***.

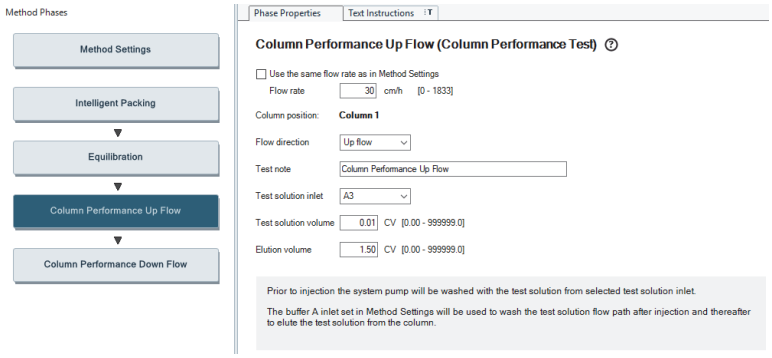

Note:
*The **Intelligent Packing** predefined method includes by default both one upflow and one downflow test. If only one column performance test is desired, delete one phase. If no test is to be performed, delete both column performance phases and the equilibration phase.*

9	In the ***File*** menu of the ***Method Editor*** module, select ***Save As***. Select suitable name and location for the method and press ***Save***.

6.6.3 Create a method using Custom packing settings

This section describes the creation of an example ***Intelligent Packing*** method based on custom packing settings.

Follow the steps 1 to 4 as described for *Section 6.6.2 Create a method using Standard verified packing settings, on page 124*. For step 5, in the ***Intelligent Packing*** phase, select the resin named ***Custom*** or ***Custom packing settings***.

This allows you to define the packing settings, without the support from Cytiva.

Examples of available options for ***Custom packing settings*** are:

- A wider bed height range
- Possibility to edit ***Adapter velocity***, ***Pack Factor***, and ***Flow conditioning*** parameters.
- Possibility to pack to a desired Packing Factor or a specific bed height

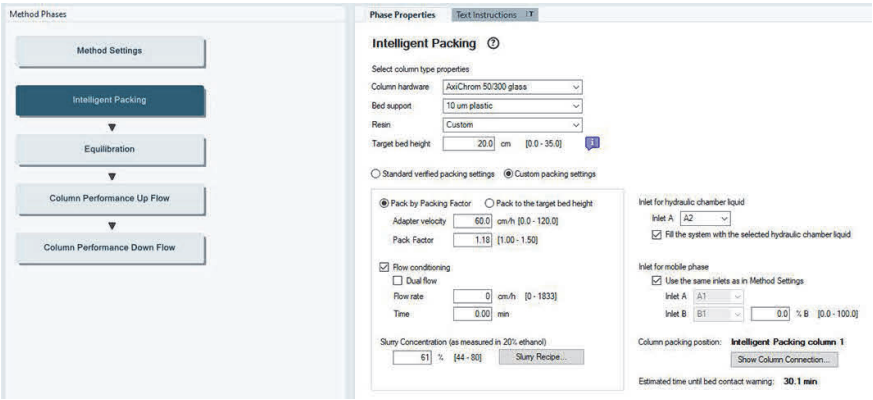

Make the appropriate changes and save the method:

In the ***File*** menu of the ***Method Editor*** module, select ***Save As***. Select suitable name and location for the method and press ***Save***.

NOTICE

Over-compression during packing can damage the resin.

6.7 Intelligent Packing with ÄKTAprocess

This section contains information that is supplementary to *Section 6.4 Intelligent packing of columns, on page 106*.

In this section

6.7.1 Introduction

NOTICE

Siphoning flow can be avoided by using Pressure Control Valves or by making sure that the liquid levels in the containers are lower than the system outlet.

NOTICE

Make sure that the air trap is filled with mobile phase liquid.

When column hardware, bed support, resin, and target bed height has been entered in the method, default values will automatically be set in the method to provide a complete method.

The methods created are designed so that the airtrap is in line with the column when equilibration and testing operations are performed. These require that flow occurs into the process chamber via the mobile phase inlet/outlet. By contrast, during packing, the method is designed so that the air trap is bypassed as hydraulic liquid is pumped into the hydraulic chamber of the column.

6.7.2 Create a method using verified packing parameters

Note: *It is recommended to click the **Set Default** button before a new method is created for **Intelligent Packing**. This will make sure that the default packing parameters are used.*

Step	Action
1	Open the ***Method Editor*** module in UNICORN and click on the ***New method*** icon. *Result:* The New Method dialog opens.
2	Select ***System*** and ***Method Wizard*** in the dialog. Click OK. On the main page of the wizard, select whether to create a method for ***Column Packing***, ***Packing Test***, or the two combined. Then make the selections in the table below.

Column	Select "AxiChrom xxx/yyy" (xxx = column diameter, yyy = max bed height for short and long column tube, 300 or 500 mm respectively). The column size can be found on a label on the column tube near the bottom flange.
Column material	Select the appropriate material. The only available option is Glass.

Step	Action
	Bed support type — Select the appropriate bed support type and material. The material options are stainless steel and plastic. The porosity choice (10 or 20 µm) is dependent on the bead size of the resin.
	Show medium type — Select the appropriate resin type.
	Medium — Select the appropriate BioProcess resin.
3	Click on ***Next*** to display the ***Packing Parameters 1*** wizard page. Select the appropriate variables.

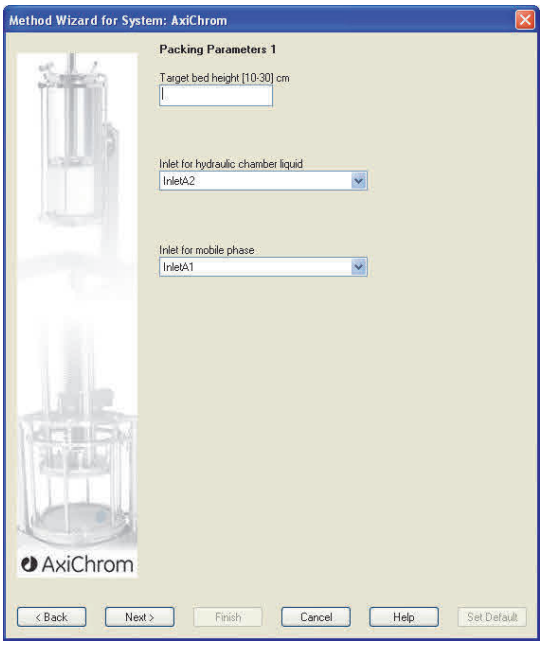

Target bed height — Enter a value within the designated range.

Note:
There are different scales for stainless steel and plastic bed supports on the column.

Step	Action	
	Inlet for hydraulic chamber liquid	Select the appropriate inlet.
	Inlet for mobile phase	Select the appropriate inlet.

4 Click on ***Next*** to display the ***Packing Parameters 2*** wizard page.

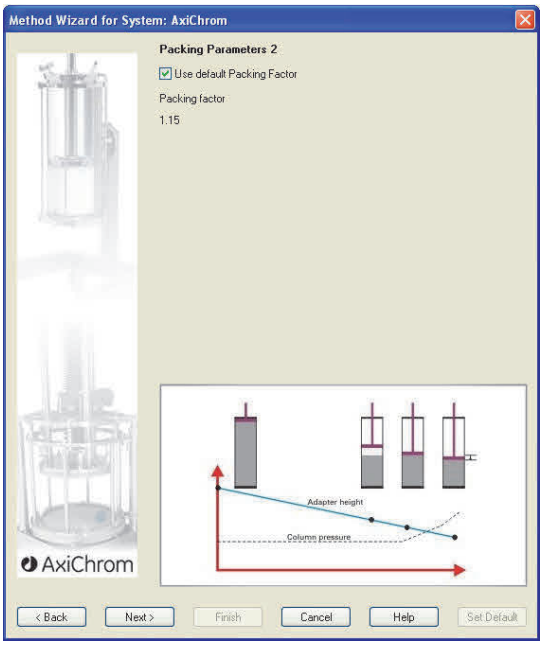

The ***Use default Packing Factor*** box is checked automatically, which means that the resin will be packed using a predetermined packing factor. Unless specifically stated in the instructions for a particular BioProcess resin, it is recommended to use the default Packing Factor. Unchecking this option, for example for custom media allows the user to enter a Packing Factor in the range of 1.00 to 1.30, see *Section 6.7.3 Create a method using custom packing settings, on page 138*.

Step	Action
5	Click on ***Next*** to display the ***Slurry and Packing Test Parameters*** wizard page. Make the appropriate selections.

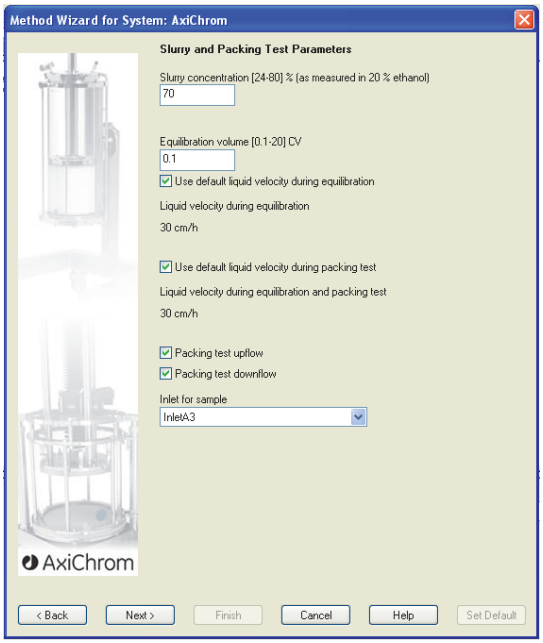

Slurry concentration	Enter the slurry concentration (see *Section 6.3.1 Prepare the slurry, on page 99*).
Equilibration volume	Enter an Equilibration volume (measured in CV) within the designated range. Default values are given according to the recommended packing and test liquid for the selected medium.
Use default liquid velocity during equilibration	Leave the checkbox selected to use the suggested default liquid velocity of 30 cm/h or 60 cm/h for ÄKTAprocess id 6 mm/3/8" or 10 mm/1/2", respectively.
Use default liquid velocity during packing test	Leave the checkbox selected to use the suggested default liquid velocity of 30 cm/h or 60 cm/h for ÄKTAprocess id 6 mm/3/8" or 10 mm/1/2", respectively.
Packing test upflow and Packing test downflow	Select whether to perform packing tests upflow, downflow or both. Both are selected by default.

Step	Action
	Liquid velocity during flow conditioning This parameter is only visible if flow conditioning is part of the packing process. It is recommended to use the predefined flow rate.
	Duration of flow conditioning This parameter is only visible if flow conditioning is part of the packing process. It is recommended to use the predefined time.
	Inlet for sample Select the appropriate inlet for sample solution. Inlet A3 is default for ÄKTAprocess.
6	Click on ***Next*** to display the ***Column Packing Summary*** wizard page.

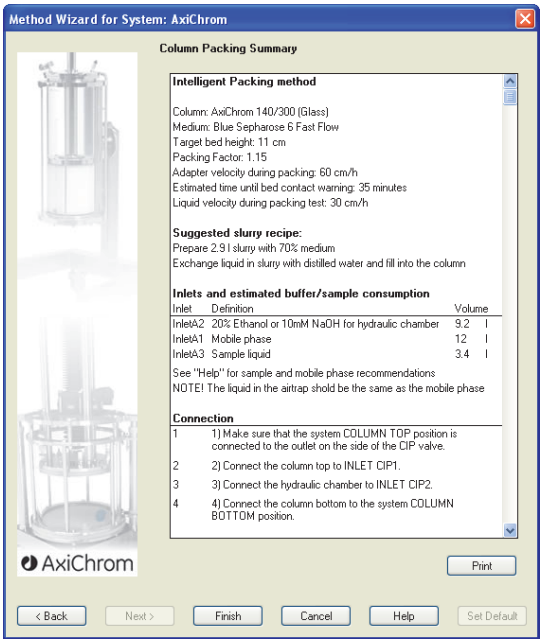

This page provides a summary of the options selected in the previous wizard pages.

A "Suggested slurry recipe" and estimated buffer consumption are also presented. The summary page gives a reminder that it is important to change to the recommended packing liquid.

Step	Action
	An "Estimated time until bed contact warning" is given. This is the estimated time taken for the adapter to move to a position 5 or 7 cm above the consolidated bed surface in the short or long column respectively. When this position is reached a warning dialog is displayed to prepare the user to be ready for when the adapter comes into contact with the consolidated bed. When the adapter reaches the consolidated bed surface the user is required to click on ***Continue*** in the warning dialog.
7	Click on ***Finish***. The column packing summary can then be viewed under Notes/Method Notes in the Method editor module of UNICORN.
8	Choose an appropriate result file folder and start protocol, and save the method.

6.7.3 Create a method using custom packing settings

Intelligent Packing methods can also be developed using custom packing settings. This allow a wider range of variables to be defined to optimize the method.

For example, it is possible to:

- Pack according to a desired ***Packing Factor*** or a specific bed height. If selecting the latter option, the user stops the compression when the final bed height has been reached.
- Select ***Flow conditioning*** with associated variables.
- Specify desired ***Adapter velocity*** during packing within defined range.

Follow the instructions for using custom packing settings when creating an ***Intelligent Packing*** method:

NOTICE

Over-compression during packing can damage the resin.

Step	Action
1	Start the method wizard in the method editor window and choose ***System*** in the pop up window.
2	Select the appropriate AxiChrom column.

Step	Action
3	Select ***All*** or ***Other*** media type, and then select ***Custom*** resin (medium). 
4	Click on ***Next*** to continue in the wizard.

6.8 Pack the column using Intelligent Packing

This procedure assumes that the adapter and top plate are fitted onto the column, see *Section 5.5 Fit the top plate and adapter, on page 73*.

CAUTION
If the hydraulic chamber vent valve is opened while there is pressure in the hydraulic chamber, liquid will spray out. Take necessary precautions to avoid personal injury or damage to equipment.

Step	Action
1	Make sure that the adapter is in its starting position, see *Section 5.5 Fit the top plate and adapter, on page 73*.

CAUTION
Make sure that the pivot stand locking pin is secured before starting the process so that the column cannot turn over by accident.

CAUTION
The column must be leveled during packing and processing to prevent the column from overturning.

CAUTION
Make sure that the top plate is completely closed by confirming that the machined marks in the top plate and the top flange/top bayonet are aligned. For AxiChrom 140 and 200, also make sure the six bolts are tightened.

2	Make sure that the hydraulic chamber outlet has been sealed.

Step	Action
3	If any of the tubing from the system to the column has a valve, make sure that this is open. **NOTICE** Make sure there is no restriction in the flow path when pumping liquid into the column.
4	Start the ***Intelligent Packing*** method and follow the instructions: **a.** The ÄKTA system performs a wash procedure to fill the system with hydraulic liquid.

Step	Action
b.	Follow the instructions on the screen to purge air from the hydraulic chamber. The first instruction is to open the hydraulic chamber vent valve and press on ***Confirm and Continue***. To do this, first loosen the plug to the vent valve and attach a syringe without plunger. Then click on ***Confirm and Continue***. As the air purging step proceeds the syringe will fill up with liquid from the hydraulic chamber. Click on ***Confirm and Continue*** when no air bubbles are seen. This stops the flow of liquid. Follow the instruction to seal the vent valve and remove the syringe. ***Note:*** *Do not seal the hydraulic chamber vent valve too early, i.e. wait for the instruction to close the vent valve. Otherwise the adapter will be pushed down in the column without UNICORN recognizing that the actual consolidation step with timed countdown has started, and will require that the bed is repacked.* **For 50-100 columns:** **NOTICE** Make sure to remove the syringe otherwise it may become hooked under the adapter rod top and hinder the packing, especially if packing a low bed height. **For 140 and 200 columns:** **NOTICE** For ÄKTAprocess: It is important to avoid siphoning flow at all times, especially when the hydraulic chamber is purged from air. Use a wide system outlet tubing, see chapter *Section 4.6.2 Tubing used between column and system, on page 51*.
c.	Click on ***Confirm and Continue*** again to start the consolidation. **NOTICE** Make sure that the column is free from air before the process run is started.

Step	Action
	d. The bed consolidates as the adapter moves down in the column. The time taken for the adapter to reach the surface of the consolidated bed is estimated during method generation and can be viewed in the method notes. Before the consolidated bed height is reached a warning dialog is displayed.

NOTICE

Check for air bubbles underneath the scraper seal and bed support of the adapter. Air bubbles shall be avoided since they will interfere with the packing of the resin.

e. As soon as the adapter comes into contact with the consolidated bed, click immediately on ***Confirm and Continue*** in the dialog on the computer screen.

NOTICE

It is essential to click on ***Confirm and Continue*** in the wizard when the adapter comes into contact with the consolidated bed surface to achieve the right compression. Clicking ***Confirm and Continue*** too early or too late will deliver a too low or too high Packing Factor respectively. It is also important to correctly judge the correct level of the bed surface as resin can sometimes accumulate at the edges of the consolidated bed.

Make sure to observe the bed height straight on and not from at an angle.

Step	Action

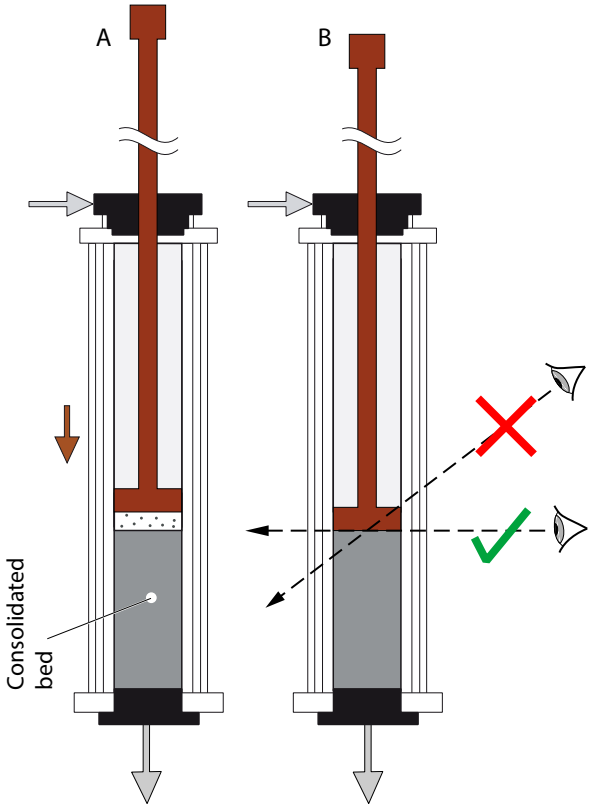

f. When the compression is completed the system automatically stops the flow of packing liquid.

g. Read the final bed height according to the scale on the side of the column.

Note:

There are different scales for stainless steel and plastic bed supports on the column.

5 When the packing test is completed open the ***Evaluation module*** of UNICORN and perform an integration of the peak using the packed bed height value.

6 It is recommended to replace the tubing with a stop plug [101] or a TC end cap [131] at the check valve [116].

6.9 Manual packing of the column

The columns can be manually packed using an ÄKTA system. This may be useful when developing new methods that demand definition of other packing parameter values than those allowed in the ***Intelligent Packing*** wizard/phase. Even if the wizard or the phases are not used, the instrument configuration allows access to some useful method instructions (see below). For more information about the latest ***Instrument Configuration*** or other software updates visit the product page for that specific ÄKTA system or contact Cytiva sales or customer support.

However, manually packing of *AxiChrom* column is normally not necessary with *ÄKTA pilot 600*. Using the ***Intelligent Packing*** method with ***Custom packing settings*** opens up for a wider range in the packing parameters including the bed height.

CAUTION
Always use an appropriate pressure alarm or preferably a safety valve.

CAUTION
If the hydraulic chamber vent valve is opened while there is pressure in the hydraulic chamber, liquid will spray out. Take necessary precautions to avoid personal injury or damage to equipment.

CAUTION
The column must be leveled during packing and processing to prevent the column from overturning.

For 140 and 200 columns:

CAUTION
Always use an appropriate pressure alarm or preferably a safety valve. There are rupture discs available as accessories. To relieve high pressure, see *Section 6.2 Overpressure situation, on page 95*.

In this section

6.9.1 Manual packing with ÄKTA pilot 600

CAUTION

Make sure that the pivot stand locking pin is secured before starting the process so that the column cannot turn over by accident.

Step	Action
1	Prepare the resin slurry (see *Section 6.3.1 Prepare the slurry, on page 99*). Remember to compensate for the compression and the Slurry Volume Factor when calculating the slurry volume needed to achieve the target bed height. The target bed height is calculated from the consolidated bed height and the Packing Factor. $\text{Packed bed height} = \frac{\text{consolidated bed height}}{\text{packing factor}}$
2	Transfer the resin into a suitable packing liquid, see *Section 6.3.1 Prepare the slurry, on page 99*.
3	Connect the AxiChrom column to a compatible ÄKTA system, see *Section 4.6 Connect the column to the system, on page 49*.
4	Prime the column, see *Section 6.3.2 Prime a column with stainless steel bed supports, on page 101*.
5	Pour the slurry into the column, see *Section 6.3.4 Pour slurry into the column, on page 104*.
6	Fit the adapter and top plate onto the column, see *Section 5.5 Fit the top plate and adapter, on page 73*.

NOTICE

Make sure that the full flow path is unrestricted when pumping liquid into the column.

NOTICE

Insert the adapter into the column tube at an angle to make sure that no air is trapped in the column.

Step	Action
7	Place a syringe (without plunger) onto the hydraulic chamber vent valve, and open the vent valve.
8	To pump liquid into the hydraulic chamber, select ***Manual*** →***Execute Manual Instructions*** in the UNICORN ***System Control*** module. Open inlet: ***Flow path*** →***Inlet A*** →***Inlet A2*** (connected to hydralic liquid). Bypass the Air trap: ***Flow path*** →***Air trap valve*** →***By-pass*** Set column position: ***Flow path*** →***Column valve*** →***Intelligent packing column 1 (or 2)*** Set the levels of the pressure alarms: ***Alarms*** →***Alarm pre column pressure*** →***High alarm*** Set the alarm values according to the values defined in *Section 9.1.2 Primary specifications, on page 254*. Open outlet: Select ***Flow path*** →***Outlet*** →***Waste/Out 1*** → Set flow: ***Pumps*** →***System flow*** →***Flow rate***
9	Pump hydraulic liquid into the hydraulic chamber using flow velocities from *Section 3.4.2 Packing flow rates, on page 27*. **For 200 columns:** To pack the column faster both pump A and pump B can be used. Open ***Inlet B*** and select ***Pumps*** →***Dual pump flow***.
10	Close the hydraulic vent valve when no air remains in the hydraulic chamber, i.e. liquid has been forced into the syringe and no more air bubbles come. Remove the syringe. The adapter starts moving down and the resin is packed. **For 50-100 columns:** **NOTICE** Make sure to remove the syringe. If not, it might get hooked under the adapter rod top and hinder the packing, especially if packing a low bed height.
11	Note when the adapter comes into contact with the consolidated bed. ***Note:*** *There are different scales for stainless steel and plastic bed supports on the column.*

Step	Action
12	Continue to compress the bed until the bed height is reached. Calculate the achieved Packing Factor (PF), or, Continue to compress until the target Packing Factor (PF) is reached. Read the bed height. Calculate the achieved Packing Factor (PF). $PF = \frac{\text{consolidated bed height}}{\text{packed bed height}}$
13	Turn off the pump when the target bed height is reached.
14	Wash the system by running System wash with mobile phase for 320 ml.
15	Run the column upflow for a few minutes to remove residual air possibly trapped in the adapter. The column is now packed. Before using it, evaluation of the packing is recommended.
16	**For 50-100 columns:** Replace the tubing with a stop plug [101] at the check valve [116]. **For 140 and 200 columns:** Replace the tubing with an end cap [131] at the check valve [116].

6.9.2 Manual Packing with ÄKTAprocess

CAUTION

Make sure that the pivot stand locking pin is secured before starting the process so that the column cannot turn over by accident.

Step	Action
1	Prepare the resin slurry (see *Section 6.3.1 Prepare the slurry, on page 99*). Remember to compensate for the compression and the Slurry Volume Factor when calculating the slurry volume needed to achieve the target bed height. The target bed height is calculated from the consolidated bed height and the Packing Factor. $\text{Packed bed height} = \frac{\text{consolidated bed height}}{\text{packing factor}}$
2	Transfer the resin into a suitable packing liquid, (see *Section 6.3.1 Prepare the slurry, on page 99*).
3	Connect the AxiChrom column to a compatible ÄKTA system, see *Section 4.6 Connect the column to the system, on page 49*.
4	Prime the column, see *Section 6.3.2 Prime a column with stainless steel bed supports, on page 101*.
5	Pour the slurry into the column, see *Section 6.3.4 Pour slurry into the column, on page 104*.
6	Fit the adapter and top plate onto the column, see *Section 5.5 Fit the top plate and adapter, on page 73*.

NOTICE

Make sure that the full flow path is unrestricted when pumping liquid into the column.

NOTICE

Insert the adapter into the column tube at an angle to make sure that no air is trapped in the column.

Step	Action
7	Place a syringe (without plunger) onto the hydraulic chamber vent valve, and open the vent valve.
8	To pump liquid into the hydraulic chamber: The following instructions are reached by selecting ***Manual*** in the UNICORN ***System Control*** module. Open inlet: ***Valves*** →***Inlet A*** →***Inlet A2*** (connected to hydraulic liquid). Open inlet CIP2: ***Valves*** →***Inlet CIP*** → ***Inlet CIP2***. Bypass the Air trap: ***Valves*** →***Air trap*** →***Bypass*** Set column downflow: ***Valves*** →***Column*** →***DownFlow***. Set the levels of the pressure alarms: Select ***Alarms***, select ***Press_PIA111_Alarm*** and ***Press_PIA112_Alarm*** and set to ***High alarm***. Set the alarm values according to the values defined in *Section 9.1.2 Primary specifications, on page 254*. Open outlet: Select ***Valves*** →***Outlet*** →***Outlet1*** Set flow: ***Pumps*** →***Flow*** →***FlowRate***
9	Pump hydraulic liquid into the hydraulic chamber using flow velocities from *Section 3.4.2 Packing flow rates, on page 27*.
10	Close the hydraulic vent valve when no air remains in the hydraulic chamber, i.e. liquid has been forced into the syringe and no more air bubbles come, and remove the syringe. The adapter starts moving down and the resin is packed.
11	Note when the adapter comes into contact with the consolidated bed. ***Note:*** *There are different scales for stainless steel and plastic bed supports on the column.*
12	Continue to compress the bed until the target bed height is reached. Calculate the achieved Packing Factor (PF), or, Continue to compress until the target Packing Factor (PF) is reached. Read the bed height. Calculate the achieved Packing Factor (PF). $PF = \frac{\text{consolidated bed height}}{\text{packed bed height}}$
13	Turn off the pump when the target bed height is reached.
14	Wash the system by running 1.5 L mobile phase at e.g. 180 L/h with the air trap and the column in ***Bypass*** mode.

Step	Action
15	Run the column upflow for a few minutes to remove residual air possibly trapped in the adapter. The column is now packed. Before using it, evaluation of the packing is recommended, see *Section 6.10 Performance evaluation of the column, on page 155*.
16	It is recommended to replace the tubing with a suitable end cap [131] at the check valve [116].

6.9.3 Manual packing with a separate packing pump

It is possible to pack AxiChrom 50-200 columns with a separate packing pump.

CAUTION

Make sure that the pivot stand locking pin is secured before starting the process so that the column cannot rotate by accident.

1. Prepare the resin slurry (see *Section 6.3.1 Prepare the slurry, on page 99*). Remember to compensate for the compression when calculating the slurry volume needed to achieve the target bed height. The target bed height is calculated from the consolidated bed height and the Packing Factor.

$$\text{Packed bed height} = \frac{\text{consolidated bed height}}{\text{packing factor}}$$

2. Prime the column, see *Section 6.3.2 Prime a column with stainless steel bed supports, on page 101*, and close the bottom mobile phase inlet/outlet.
3. Pour the slurry into the column, see *Section 6.3.4 Pour slurry into the column, on page 104*.
4. Fit the adapter and top plate onto the column, see *Section 5.5 Fit the top plate and adapter, on page 73*.

NOTICE

Make sure there is no restriction in the flow path when pumping liquid into the column.

NOTICE

Insert the adapter into the opening of the column tube at an angle to make sure that no air is trapped in the column.

For 50-100 columns:

NOTICE

Make sure that the top plate is completely closed by confirming that the bayonet tool in the top plate is aligned with the machined mark on the top bayonet.

5. Close the top mobile phase inlet/outlet.

6. Place a syringe (without plunger) into the hydraulic chamber vent valve, and open the vent valve.
7. Connect the pump to the hydraulic chamber inlet valve.
8. Pump hydraulic liquid into the hydraulic chamber using appropriate flow rates (see *Section 3.4.2 Packing flow rates, on page 27*).
9. Close the hydraulic vent valve when no air remains in the hydraulic chamber, i.e. liquid has been forced into the syringe and no more air bubbles come. Immediately open the bottom mobile phase inlet/outlet. The adapter starts moving down and the resin starts to consolidate.
10. Note when the adapter comes into contact with the consolidated bed.

    Note: *There are different scales for stainless steel and plastic bed supports on the column.*

11. Continue to compress the bed until the target bed height is reached. Calculate the achieved Packing Factor (PF).

    or,

    Continue to compress until the target Packing Factor (PF) is reached.

    Read the bed height. Calculate the achieved Packing Factor (PF).

    $$PF = \frac{\text{consolidated bed height}}{\text{packed bed height}}$$

12. Turn off the pump when the target bed height is reached.
13. Open the top mobile phase inlet/outlet.
14. Run the column upflow with mobile phase for a few minutes to remove residual air possibly trapped in the adapter.

    Note: *The column is now packed. Before using it, evaluation of the packing is recommended.*

15. **For 50-100 columns:** Replace the tubing with a stop plug [101] at the check valve [116].

    For 140 and 200 columns: Replace the tubing with an end cap [131] at the check valve [116].

6.10 Performance evaluation of the column

In this section

6.10.1 Background

The efficiency of a column depends on how well it is packed. A poorly packed column gives rise to uneven flow, resulting in zone broadening and reduced resolution. A column efficiency test should be performed directly after packing and at regular intervals during the working life of the packed bed. The test is also useful when the separation performance is seen to deteriorate. Poor test results indicate that the resin should be repacked or replaced.

A widely used method for expressing the efficiency of a packed bed is in terms of the height equivalent to a theoretical plate (HETP) and the peak asymmetry factor (A_S). These values can easily be determined by applying a sample of for example acetone or NaCl solution to the column.

Note: *It is important that the column is properly equilibrated before the packing is evaluated.*

The sample volume should be approximately 1% to 2% of the total bed volume, and 1% to 2% v/v acetone can be used. Alternatively 0.8 M sodium chloride, or equivalent can be applied to a 0.4 M NaCl elution buffer, depending on the resin used. Use a liquid velocity 30 to 40 cm/h for 34 µm and 50 µm resin and 20 cm/h for 75 and 90 µm resin. Running the HETP test at a higher velocity or using a larger sample volume will affect both HETP and A_S values. The airtrap and any filters should be bypassed during the sample application to avoid back-mixing.

An application note that describes column testing (Column efficiency testing, Application note 28937207) is also available from Cytiva.

6.10.2 HETP calculation

Calculate the height equivalent of a theoretical plate (HETP) and asymmetry factor (A_S) from the UV curve, or conductivity curve if sodium chloride is used as sample, as follows:

$HETP = L / N$

$N = 5.54 (V_R / w_h)^2$

Variable	Meaning
L	Bed height
N	Plate number
V_R	Retention volume
w_h	Peak width at half peak height

V_R and w_h are in the same units

To facilitate comparison of column performance, the concept of reduced plate height (h) is often used. Reduced plate height is calculated as:

$h = HETP/d_p$

where d_p is the mean diameter of the beads.

As a guideline, a value of h < 3 is normally well acceptable at the optimal test conditions presented above.

6.10.3 Asymmetry calculation

The peak should be symmetrical and the asymmetry factor as close to 1 as possible (values between 0.8 and 1.8 are usually acceptable). A change in the shape of the peak is usually the first indication of bed deterioration due to use.

The asymmetry factor A_s describes the deviation from an ideal Gaussian peak shape and is calculated from the peak width at 10% of peak height:

$A_s = b/a$

The following test chromatogram shows the parameters used to calculate peak broadening and peak symmetry.

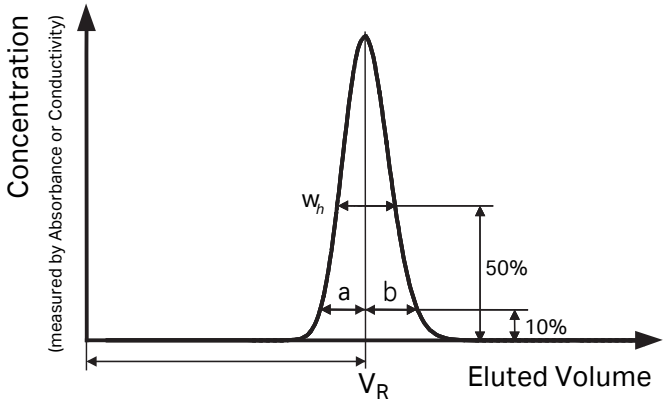

6.11 Unpacking a packed column

The following procedures may be used for both ***Intelligent Packing*** and manual packing.

Note: *Make sure that the pressure alarm is enabled in UNICORN.*

WARNING

Remove the mechanical locking equipment before unpacking the column. If it is not removed over-pressure might be created in the column.

In this section

6.11.1 AxiChrom 50-100

Step	Action
1	Replace the tubing from the top mobile phase inlet/outlet with a stop plug.
2	Relieve the pressure in the hydraulic chamber, see *Section 6.2.2 Release pressure from the hydraulic chamber, on page 97*.
3	Connect one end of a tubing to the hydraulic chamber outlet valve and the other end of the tubing to waste.
4	Start the system by slowly pumping (30 cm/h) the appropriate liquid upflow into the process chamber. Monitor the pressure constantly to see that it does not increase above the maximum pressure rating for the column and the resin, and check that hydraulic liquid is running to the waste container.
5	When a thin layer of liquid has accumulated under the packed bed increase the flow rate successively, again monitoring the pressure carefully. During this procedure the adapter will move upwards in the column and the resin bed will successively break up.

NOTICE

Never exceed an adapter velocity of 120 cm/h, to avoid damage to the scraper seal.

6	As the adapter begins to reach its upper position, slow the flow rate for the final 3 to 4 cm.
7	When the lower surface of the adapter is about 2 cm below the lower surface of the top bayonet/top flange, turn off the flow. This is to facilitate safe removal of the liquid above the adapter.
8	Open the top plate, remove remaining hydraulic chamber liquid, close the top plate and pump the adapter to its upper position. See *Section 5.6.3 Move the adapter upwards in the column, on page 85*. A sudden pressure decrease indicates that the adapter has passed the beveling at the top of the glass tube.

Step	Action
9	Remove the top plate and adapter, see *Section 5.7 Remove the top plate and adapter, on page 90*. **WARNING** Remove any spillage on the floor immediately to minimize the risk for slipping accidents. **CAUTION** Removing the top plate and adapter often causes spillages and splashing. Always use safety glasses and protective clothing.

6.11.2 AxiChrom 140-200

Step	Action
1	Replace the tubing from the top mobile phase inlet/outlet with a TC end cap.
2	Relieve the pressure in the hydraulic chamber, see *Section 6.2.2 Release pressure from the hydraulic chamber, on page 97*.
3	Connect one end of a tubing to the hydraulic chamber outlet valve and the other end of the tubing to waste.
4	Start the system by slowly pumping (30 cm/h) the appropriate liquid upflow into the process chamber. Monitor the pressure constantly to see that it does not increase above the maximum pressure rating for the column and the resin, and check that hydraulic liquid is running to the waste container.
5	When a thin layer of liquid has accumulated under the packed bed increase the flow rate successively, again monitoring the pressure carefully. During this procedure the adapter will move upwards in the column and the resin bed will successively break up.

NOTICE

Never exceed an adapter velocity of 120 cm/h, to avoid damage to the scraper seal.

Note:

For the 200 column on ÄKTA pilot 600 only: To run the adapter faster than 118.7 cm/h, use both pump A and pump B.

6	As the adapter begins to reach its upper position, slow the flow rate for the final 3 to 4 cm.
7	When the lower surface of the adapter is about 2 cm below the lower surface of the top bayonet/top flange, turn off the flow. This is to facilitate safe removal of the liquid above the adapter.
8	Unscrew the six screws [808] to separate the top plate [803] from the top flange [804].

Step	Action
9	Lubricate the adapter rod [802] using a cloth wetted with 20% (v/v) ethanol and open the top plate. Insert the distance pin to separate the top plate from the adapter.

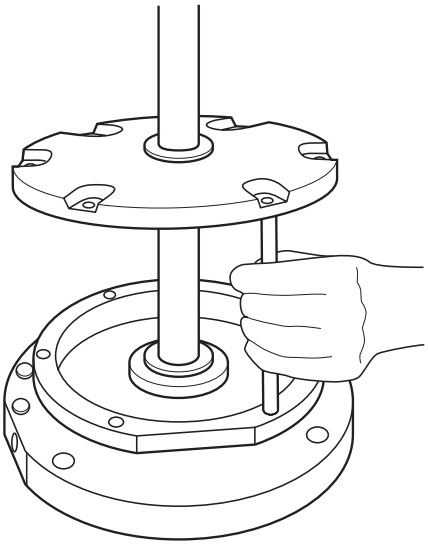

10	Remove remaining hydraulic chamber liquid using for example a syringe.
11	Remove the distance pin, close the top plate and pump the adapter to its upper position. A sudden pressure decrease indicates that the adapter has passed the beveling at the top of the tube.
12	Remove the top plate and adapter (see *Section 5.7 Remove the top plate and adapter, on page 90*).

WARNING

Remove any spillage on the floor immediately to minimize the risk for slipping accidents.

CAUTION

Removing the top plate and adapter often causes spillages and splashing. Always use safety glasses and protective clothing.

6.12 Cleaning-In-Place (CIP)

Description

Efficient cleaning methods should be developed as an integral part of the complete process to maximize the working life of the resin. CIP removes precipitated material, strongly bound substances and other contaminants from the resin without the need to disassemble the column. Regular CIP between batches helps assure the desired product quality and the expected working life cycle of the resin and equipment.

For more information about which chemicals to use for CIP, see *Table 9.1, on page 262*.

Note: *Make sure that the resin and the column withstands the chemicals used for CIP.*

6.13 Sanitization

Description

Sanitization is the use of chemical agents to reduce a microbial population to an acceptable, predetermined level. AxiChrom columns have been tested for the efficiency of microbiological sanitization and endotoxin clearance using 1 M sodium hydroxide (NaOH) as the clearance/sanitization agent as described in Application note 28929042, "Sanitization and endotoxin clearance in AxiChrom™ columns".

A sanitization procedure is used when there is a need to ensure microbial reduction, for example before changing a product or when there has been unwanted microbial contamination.

In general, a low liquid velocity (60 cm/h) is used for the whole process.

Note: *Before the sanitization method is started, check that the resin withstands 1.0 M NaOH.*

Regular cleaning

Regularly wipe the outside of the column using a cloth moist with an antibacterial agent. This reduces the risk of microbial growth.

General method for sanitization-in-place

1. Rinse the column with purified water, 2 column volumes (CV) upflow at a flow velocity of 60 cm/h.
2. Flush the column with 1.0 M NaOH:
   a. 2 CV upflow at a velocity of 60 cm/h.
   b. 2 CV downflow at a velocity of 60 cm/h.
3. Recirculate 5 CV of 1.0 NaOH, upflow for 4 hours at a velocity of 60 cm/h.

   For 50 and 70 columns with plastic bed support: Recirculate 5 CV of 1.0 M NaOH, upflow for 2 hours followed by downflow for 2 hours at a pressure of 1 bar.
4. Wash the column with buffer or water of desired quality to achieve a neutral pH.
5. Re-equilibrate the column with storage or starting buffer/liquid.

Autoclaving

Stainless steel bed supports can be autoclaved. Keep the steel mesh facing upwards during autoclaving and until the bed support has cooled to room temperature.

For efficient autoclaving, the column must be completely disassembled. All plastic components, such as seals, tubes, bed support, support net, distributor, end cell, and snap ring must be disassembled from the column.

Any parts that have been in contact with the process stream and cannot be autoclaved must be appropriately cleaned using some other method, or replaced with a new part prior to reassembling the column.

6.14 Emptying a column on a pivot stand

Step	Action
1	Make sure that the wheels on the pivot stand are locked.
2	Unpack the column, see *Section 6.11 Unpacking a packed column, on page 159*.
3	Remove the adapter and top plate assembly (see *Section 5.7 Remove the top plate and adapter, on page 90*).
4	Release the pin at the pivot stand, if used, tilt the column and pour out the resin into a container.

CAUTION

For 140 and 200 columns: Do not tilt the column when the adapter is placed in the adapter holder. Remove the adapter and the adapter holder first.

5	If settled resin needs to be resuspended, pump packing liquid upflow into the column, and/or use a media stirrer.

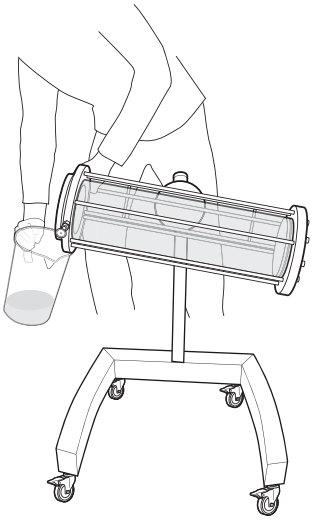

6.15 Storage

Residual chloride ions can be corrosive to stainless steel over time. Therefore, it is critical to rinse away any NaCl buffer that may have come into contact with any part of the column during operation.

NOTICE

Always store the column at a stable ambient temperature.

NOTICE

By tightening the locking nuts on the mechanical locking equipment, there is a risk of working the adapter down and compressing the bed more than intended during the packing of the column.

Storage of a packed column up to 24 hours

The column may be stored with a packed bed and packing liquid for a recommended period of no more than 24 h. Storage beyond this time may lead to microbial growth. If within this 24 h period the pump or system to which the column is connected is needed for other purposes during the storage period of the column, it is appropriate to fit the mechanical locking equipment (see *Section 4.3 Mechanical locking of the adapter, on page 40*) onto the column. Plug the mobile phase inlets/outlets and the hydraulic chamber inlet. Make sure that the storage conditions of the column do not cause an increased pressure in the column.

Storage of a packed column for longer than 24 hours

For storage periods longer than 24 h, the process chamber containing the resin must be filled with appropriate antimicrobial agent, for example 20% (v/v) ethanol, refer to the instructions for the specific resin.

Use mechanical locking equipment to keep the axial compression, see *Section 4.3 Mechanical locking of the adapter, on page 40*. Plug the mobile phase inlets and outlets, and release pressure from the hydraulic chamber.

Make sure that the storage conditions of the column do not cause an increased pressure in the column. If stored in cold room use a rupture disc or pressure relief valve on the process chamber.

CAUTION

It is recommended to use the mechanical locking equipment for storage or processing that exceeds 24 hours, as the ambient temperature may vary and cause the tube to crack.

NOTICE

Low pH solutions containing chlorides can cause corrosion in stainless steel. Rinse thoroughly with clean water after each use with such solutions. Inspect the column regularly for signs of corrosion, which will cause column damage if untreated.

NOTICE

Even at low concentrations, NaOH will damage the surface of the glass tube over time.

Storage of a column over extended periods

For extended periods of storage it is recommended that the column is stored empty, dry and cleaned. The top plate and adapter [A] should be stored separately from the column tube, with the top plate [803] placed at the end of the adapter rod right below the adapter rod top [105]. Make sure that the top plate rests on its planar side to keep it in place. For the stainless steel bed support, make sure that the bed support O-ring and scraper seal on the bed support are stored in a way that prevents mechanical damage. For plastic bed supports, make sure that the snap ring on the bed support is stored in a way that prevents mechanical damage.

For 140-200 columns: The adapter should not be stored in the adapter holder.

7 Maintenance and service

About this chapter

This chapter provides information for preventive maintenance and service operations for AxiChrom columns.

In this chapter

7.1 Safety precautions

Read the general safety precautions before performing maintenance operations.

WARNING

Prior to performing any maintenance or service, make sure that the column has been emptied and properly cleaned. If this is not possible wear protective clothing.

CAUTION

When handling the adapter and top plate assembly, make sure that fingers or hands are not caught between the top plate and adapter or top plate and top bayonet/top flange when the top plate slides down the adapter rod.

CAUTION

Heavy object. At least two persons are required to lift objects over 20 kg.

NOTICE

If leaving the column tube assembly unattended, always rest it horizontally on the planar surfaces of the flanges or hanging on the pivot stand as appropriate.

NOTICE

Always wear gloves when handling the bed support to prevent fat from unprotected fingers coming into contact with the bed support.

7.2 Use of tools

Tools needed to perform maintenance operations on the columns are listed in the tables below.

For AxiChrom 50-100 columns:

Tools	AxiChrom 50	AxiChrom 70	AxiChrom 100
Wrench (mm)	5, 11, 14	5, 11, 18	6, 16, 27
Hex key (mm)	1.5, 2.5, 3, 4		2, 2.5, 4, 5
Torque wrench key with socket (mm)	10		13
Torque driver with bit (mm)	2.5		
Bayonet tool[1]	Yes (x2)		
Centering tool[1]	Yes (x2)		
Gloves	Yes		
Bottle of 20% (v/v) ethanol	Yes (for lubrication of friction surfaces)		
Mounting aid for O-Rings[1]	Yes (x2) Note: Two are supplied but only one is needed.		
Hook wrench key[1]	Yes (For maintenance of Stainless steel bed supports)		
Removal tool	Yes (For maintenance of plastic bed supports)		

[1] Supplied with column

For AxiChrom 140-200 columns:

Tool	AxiChrom 140 and 200
Wrench (mm)	8, 13, 16, 24
Hex key (mm)	2, 3, 5, 6
Torque wrench key with socket (mm)	16
Torque driver with bit (mm)	3
Centering tool[1]	Yes (x2)
Gloves	Yes
Bottle of 20% (v/v) ethanol	Yes (for lubrication of friction surfaces)

Tool	AxiChrom 140 and 200
Mounting aid for O-Rings[1]	Yes (x2) Note: Two are supplied but only one is needed.
Distance pin[1]	Yes
Removal tool	Yes (For maintenance of plastic bed supports)

[1] Supplied with column

7.3 Service and preventive maintenance

In this section

7.3.1 Scraper seal and O-rings

Optimal function of AxiChrom columns requires that the O-rings, scraper seal, and snap rings are intact and in good condition.

Make sure that the O-rings are checked regularly and when appropriate replaced with new ones. Cytiva recommends that if during maintenance and service an O-ring is removed from its position on the column, then it should always be replaced. Otherwise, it is recommended that the O-rings are replaced once a year.

The scraper seal on the adapter bed support shall be regularly checked for scratches and other damage (see *Section 7.3.2 Stainless steel adapter bed support, on page 176* or *Section 7.3.1 Scraper seal and O-rings, on page 175*). On sign of any damage the scraper seal shall be replaced. Otherwise, it is recommended that the scraper seal is replaced after ten packing operations or at least once per year, whichever comes first.

The snap ring that holds the plastic bed support must be replaced when changing the bed support.

7.3.2 Stainless steel adapter bed support

The construction and name of some column parts differs slightly between the column sizes, described in the table below. Based on the differences or similarities between the columns they can sometimes be referred to as a group of different sizes in the maintenance and service chapter.

AxiChrom50-70	AxiChrom 100	AxiChrom140 and 200
top bayonet [804]	top bayonet [804]	top flange [804]
no end cell	end cell [402]	end cell [402]

Disassemble and service

For 50-200 columns

This procedure assumes that the top plate and adapter have been removed from the column, see *Section 5.7 Remove the top plate and adapter, on page 90*.

NOTICE

Always wear gloves when handling the bed support to prevent fat from unprotected fingers coming into contact with the bed support.

Step	Action
1	**For 50-100 columns:** Use a hex key to remove the screws [401], washers [412] and O-rings [413] on the adapter [501]. **For 140 and 200 columns:** Use a hex key to remove the screws [401] on the adapter [501].
2	**For 50 and 70 columns:** Remove the bed support [301]. **For 100-200 columns:** Remove the bed support [301] from the end cell [402].
3	Remove the scraper seal [605] and O-ring [604] by gently moving them up the adapter bed support a bit at a time around the circumference. ***Note:*** *The O-ring is secured within the scraper seal so they will most likely be removed together.*
4	Check the scraper seal for scratching and wear, and the O-ring for twisting and wear. If damaged or if there is any doubt about their integrity, discard them.

Step	Action
5	Rinse the bed support with water and then inspect for signs of damage. If necessary replace the entire bed support.
6	Clean the bed support if required, for example due to clogging as determined by a drainage test, see *Section 7.4 Clean before planned service, on page 235*, or a change of resin type in the column. It is recommended to use an ultrasonic bath for cleaning (see below), or alternatively compressed air.
7	Check the end cell O-ring [411a] for visible signs of damage. If damaged, replace it with a new one.

Clean the bed support

For 50-200 columns

Follow the instructions below to clean the stainless steel bed support using an ultrasonic bath:

1. Place the bed support into a container or directly into the bath with the surface normally in contact with the resin downwards. If the bath is not wide enough to take the whole bed support, lean it against the side of the bath and make sure that no stainless steel parts of the bed support come into contact with the stainless steel edges of the bath.

> **NOTICE**
> The ultrasonic bath shall be of sufficient size to allow at least half the bed support to be immersed in cleaning liquid. The bed supports should not be allowed to come into contact with each other or any stainless steel parts of the bath.

2. Fill the bath with 1 M NaOH and apply ultrasonic cleaning for 15 minutes. If the bed support was not fully submersed in the cleaning liquid, rotate the exposed part of bed support into the liquid and repeat the operation.
3. Turn the bed support over so that its upper surface is facing downwards and repeat the previous step.
4. Rinse the bed support thoroughly with distilled water.
5. Test the cleaning efficiency with a drainage test.

Reassemble

For 50-100 columns

Step	Action
1	**For 50-70 columns:** Fit the O-ring [410] into the groove in the adapter [501]. **For 100 columns:** Fit the O-ring [411a] into the groove of the end cell [402].
2	Fit the scraper seal [605] and O-ring [604] using the following procedure:

NOTICE

Improper fitting of the scraper seal and O-ring, or damage caused to either part, may cause leakage. Follow the instructions carefully.

a. Place the adapter bed support onto a protective surface, e.g., plastic film, on a flat surface. Lubricate the O-ring on the bed support with 20% (v/v) ethanol.

Note:

For the 50 and 70 columns: *the 10 and 20 µm bed supports are not interchangeable and need to be assembled with their respective adapters.*

b. Fit the scraper seal [605] onto the bed support [301] (A). Make sure that the flat surface of the scraper seal faces is placed in contact with the flange of the bed support (B).

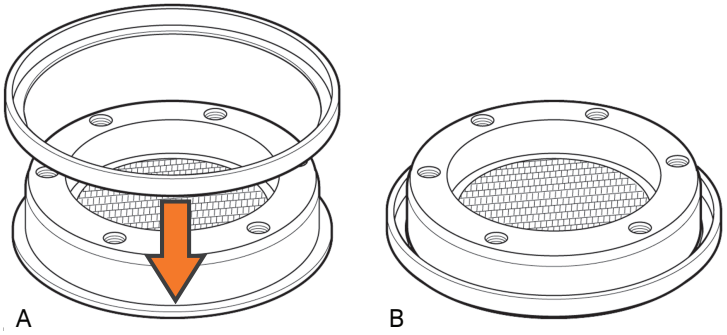

Step	Action
	c. Fit the O-ring [604] by gently moving it down the bed support a bit at a time around the circumference. Use 20% (v/v) ethanol for lubrication. Gently pull a section of the O-ring out from the bed support wall and move it downwards a fraction, and then repeat on an adjacent section of the O-ring and so on.

NOTICE

Do not roll the O-ring down the bed support as this may lead to twisting of the O-ring, which can cause leakage.

Note:

The scraper seal can be mounted in a plastic container filled with water to facilitate the placement of the scraper seal and O-ring and to avoid trapping air.

Continue until the O-ring has come into contact with the top of the wall of the scraper seal [605].

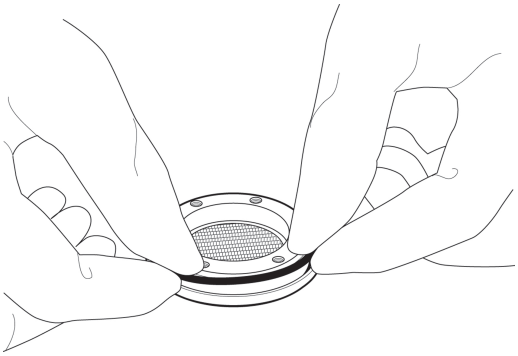

Step	Action
	d. Use the O-ring mounting tool to push the O-ring into the groove created by the scraper seal and the wall of the bed support. Press down one part of the O-ring and then at an opposite point on the O-ring circumference. Continue until the O-ring is located within the groove.

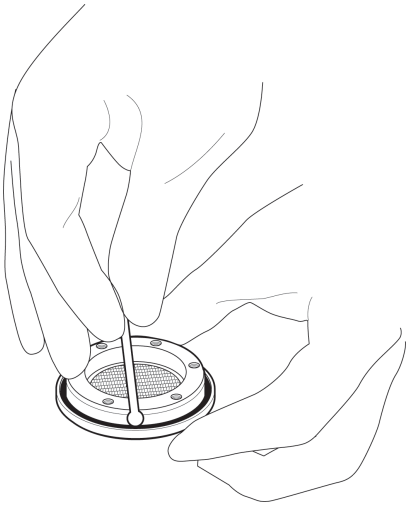

e. Make sure that the O-ring sits evenly in the groove and is not ballooning out at any point. Push the mounting tool on top of the O-ring when in place in the groove and then draw the mounting tool around the circumferance of the O-ring while applying pressure downwards. Draw the mounting tool in both directions around the O-ring circumferance. This is to release any tension in the O-ring arising from the assembly of the scraper seal and the O-ring onto the adapter bed support. Correct fitting of the O-ring (A) versus incorrect fitting as seen by the ballooning out of the O-ring (B):

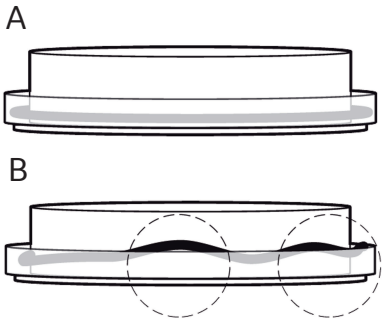

Step	Action
3	Refit the bed support [301] onto the adapter being careful to align the holes around the circumference of both parts.

NOTICE

The bed support shall be mounted in the position according to illustration B below before the screws [401] are tightened. Damage to the bed support can occur if the bed support slides on only partway, as in illustration A below. This implies that the O-ring [603] [411] has snapped off the groove in the adapter for 50 and 70 columns, or off the groove in the end cell for the 100 columns. Tightening of the screws [401] will cause the O-ring [603] [411] to be pushed onto the bed support and damage the bed support.

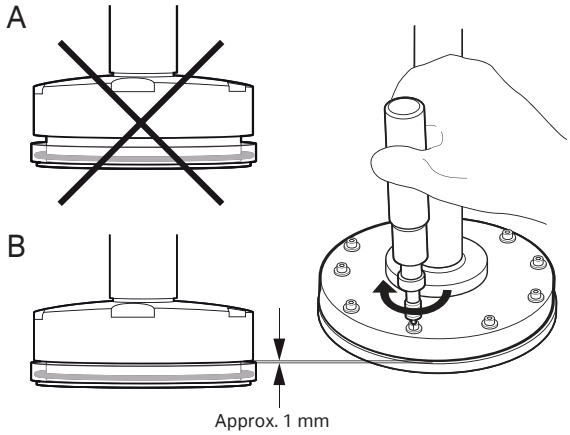

4	**For the 100 column only:** Check and replace the O-rings [413] if necessary.
5	Use a hex key to carefully refit the screws [401] on the adapter.
6	Using a torque driver, tighten each screw a little at a time crosswise, **for 50 and 70 columns** to 0.5 Nm, and **for 100 columns** to 1 Nm. Do not over-tighten. When tightened, there will be a gap of approximately 1 mm between the bed support and the adapter.

For 140-200 columns

Step	Action
1	Fit the O-ring [411] into the groove of the end cell [402].

Step	Action
2	Fit the scraper seal [605] and O-ring [604] onto the bed support [301] using the following procedure:

NOTICE

Improper fitting of the scraper seal and O-ring, or damage caused to either part, may cause leakage. Follow the instructions carefully.

a. Place the adapter bed support into a plastic container with a flat bottom. Fill the container with water and put the bed support at the bottom facing downwards.

b. Place the O-ring inside the seal and simultaneously fit the scraper seal [605] and O-ring [604] onto the bed support [301]. Gently move the scraper seal and O-ring down, a little bit at the time around the circumference, towards the flange of the bed support. Make sure that the flat part of the seal is placed to come in contact with the flange of the bed support all around the circumference.

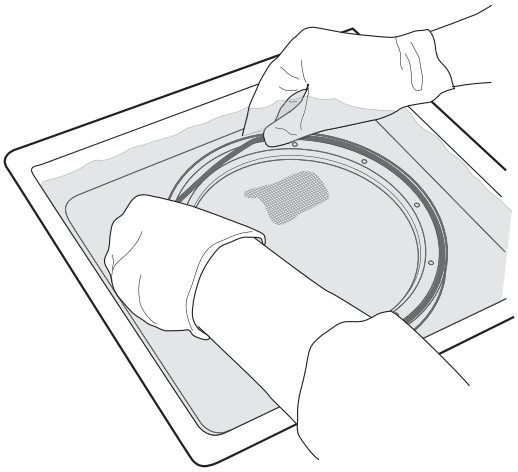

NOTICE

Do not roll the O-ring down the bed support as this may lead to twisting of the O-ring, which can cause leakage.

Step	Action
	c. Use a finger or the O-ring mounting tool to push the O-ring around the circumference until it is evenly located into the groove.

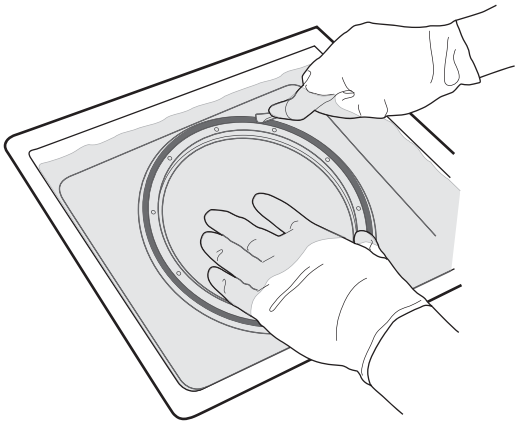

d. Make sure that the O-ring sits evenly in the groove (A) and is not ballooning out at any point, and that the scraper seal is tightly pressed against the flange of the bed support (B).

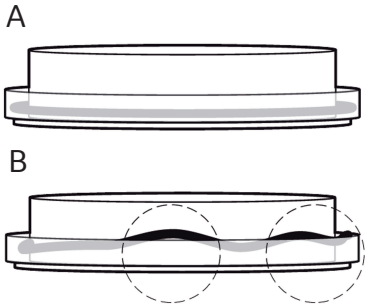

Step	Action
3	Refit the bed support [301] onto the end cell and adapter being careful to align the holes around the circumference of both parts.

NOTICE

The bed support shall be mounted in the position according to illustration B below before the screws [401] are tightened. Damage to the bed support can occur if the bed support slides on only partway, as in illustration A below. This implies that the O-ring [411] has snapped off the groove in the end cell. Tightening of the screws [401] will cause the O-ring [411] to be pushed onto the bed support and damage the bed support.

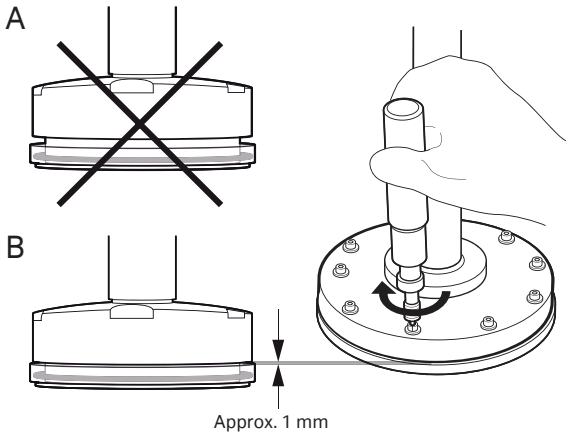

4	Use a hex key to carefully refit the screws [401] on the adapter.
5	Using a torque driver, tighten each bolt a little at a time crosswise to 1 Nm. Do not overtighten. When tightened, there will be a gap of approximately 1 mm between the bed support and the adapter.

7.3.3 Adapter rod, adapter tubing, and top plate (stainless steel bed support)

This procedure assumes that the top plate and adapter have been removed from the column, see Remove the top plate and adapter, see *Section 5.7 Remove the top plate and adapter, on page 90*). It is also required that the adapter bed support is removed for this operation, see *Section 7.3.2 Stainless steel adapter bed support, on page 176*).

Disassemble and service

For 50-100 columns

Step	Action
1	Undo the five stop screws [106] on the adapter rod top [105] using a hex key. Remove the adapter rod top. ***Note:*** *It is recommended that the stop screws are not fully removed from the adapter rod top to avoid losing them.*

Step	Action
2	Unscrew the adapter [D] from the adapter rod [802]; Hold with a wrench at the key grip, and then insert the hooks of the hook wrench key into the two grooves on the top surface of the adapter [D]. Carefully use the tool to obtain increased leverage when unscrewing the adapter. **For 50-70 columns:** 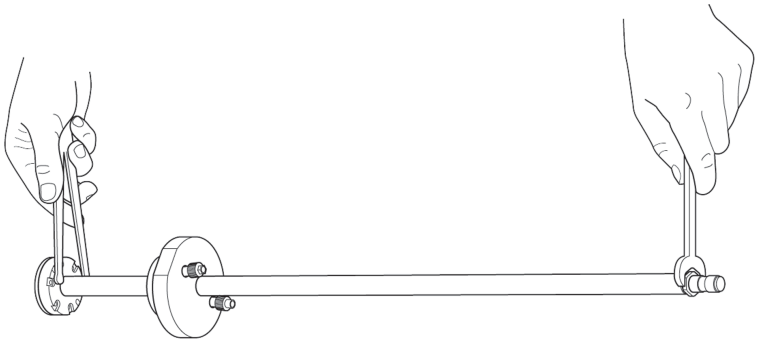 **For 100 columns:** Use a wrench key instead of the hook wrench key. 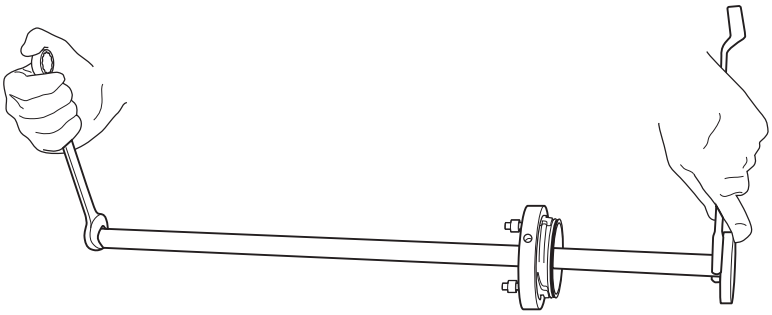

Step	Action
3	Gently pull on the adapter to withdraw the tubing from inside the adapter rod. 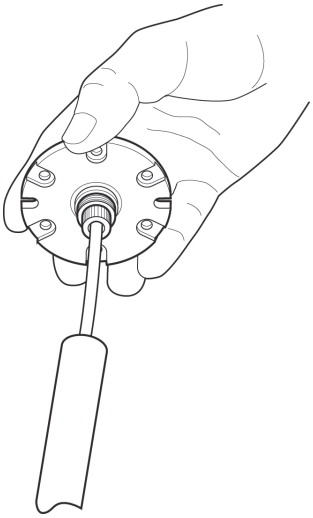
4	Unscrew the tube connection [109] from the adapter tubing [405-1] and the adapter tubing from the adapter. Check the tubing and O-rings [602a, b] for visible signs of damage. Replace if necessary. 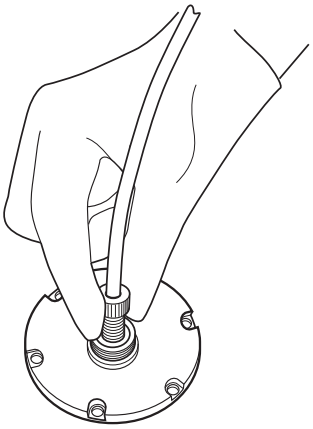

Step	Action
5	For the 100 column only: Unscrew the top end cell [402] by hand. Check and if necessary replace the O-rings [127] and [411a]. 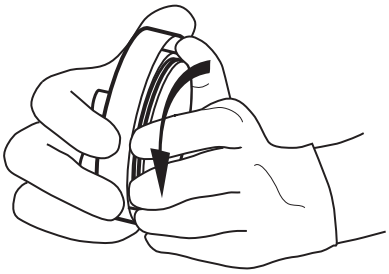 ***Note:*** *Allowing the O-ring [411a] to remain on the end cell facilitates removal.*
6	Slide the top plate [803] down the length of the adapter rod [802] and remove. Apply a small amount of ethanol 20% (v/v) on the adapter rod for easier movement of the top plate along the adapter rod. **NOTICE** The O-ring [102] (50 or 70 column) or adapter rod seal [103] (100 column), may be damaged if the top plate is removed over the key handle on the adapter rod.
7	Check the O-ring [108] on the outer rim of the top plate for visible signs of damage. Replace if necessary.
8	**For 50 and 70 columns:** If necessary, remove and replace the O-ring(s) [102] inside the top plate. **For the 100 column:** Remove and replace the adapter rod seal [103] if it has been damaged. ***Note:*** *The O-rings in the top plate are difficult to remove and should only be replaced as part of an annual service or in case of visible damage or suspected leakage.*
9	Check the O-ring [111] on the threaded end of the adapter for visible signs of damage. Replace the O-ring if necessary: **a.** Remove the old O-ring. **b.** Cover the threads on the adapter with sealing film. **c.** Take a new O-ring and roll it onto the adapter. **d.** Remove the sealing film.

For 140-200 columns

Step	Action
1	Gently pull on the end cell to withdraw the tubing [405-1] from inside the adapter rod [802]. 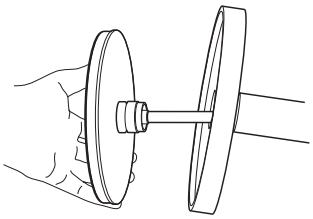 ***Tip:*** *Gently push on the tube end in the adapter rod top to help ease the end cell out of the adapter rod.*
2	Unscrew the adapter tubing [405-1] from the top end cell [301] by hand. Check the tubing [405-1] and O-ring [602] for visible signs of damage. Replace if necessary.
3	Undo the six screws [807] and remove the adapter plate [501]. Check the O-ring [111] and replace if necessary.
4	Undo the three set screws [106] on the adapter rod top [105] using an hex key. Remove the adapter rod top. ***Note:*** *It is recommended that the set screws are not fully removed from the adapter top to avoid losing them.*
5	If necessary, remove and replace the O-ring [104] in the adapter rod top.
6	Slide the top plate [803] down the length of the adapter rod [802] and remove. Apply a small amount of ethanol 20% (v/v) on the adapter rod for easier movement of the top plate along the adapter rod.
7	Check the O-ring [108] on the outer rim of the top plate for visible signs of damage. Replace if necessary.
8	Remove and replace the adapter rod gasket [103] if it has been damaged. ***Note:*** *The gasket and the guide ring in the top plate are difficult to remove and should only be replaced as part of an annual service or in case of visible damage, or suspected leakage.*

Reassemble

For 50-100 columns

Step	Action
1	**For the 100 column only:** Screw the top end cell [402] back by hand. Make sure that it is tightly screwed against the adapter plate.
2	Screw the adapter tubing with O-ring into the adapter, finger-tight only. **For the 100 column only:** Make sure that the top end cell is in place before screwing the adapter tubing in place.
3	Fit the tube connection [109] on the opposite end of the adapter tube. ***Note:*** *The tube connection [109] must be connected in the correct direction, i.e. the end that has the connector with a smaller diameter shall be connected to the system end (see exploded diagrams in Appendix A-D according to the column type).*
4	Slide the top plate onto the adapter rod from the threaded end. Apply a small amount of ethanol 20% (v/v) on the adapter rod for easier movement of the top plate along the adapter rod. **NOTICE** Always wear gloves when handling the adapter rod to avoid fat from unprotected fingers and scratching the sealing surface.
5	Feed the free end of the adapter tubing through the adapter rod from the threaded end.
6	Screw the adapter rod onto the adapter. Tighten by holding the adapter rod with a wrench and then tighten using another wrench. ***Note:*** *The parts can loosen after using the column several times. Check that the adapter rod is tight before performing each packing procedure.*
7	If necessary, remove and replace the O-ring [104] in the adapter rod top. ***Note:*** *This O-ring does not normally suffer from wear and its replacement is a difficult procedure.*

Step	Action
8	Fit the adapter rod top onto the adapter rod and tighten the three lower screws so that the rod top is centered on the adapter rod. Tighten the two upper stop screws [106] with a hex key to fix the adapter tubing in the adapter rod.

CAUTION
After the adapter rod top has been fixed to the adapter tubing do not loosen the adapter from the adapter rod. This may cause leaks inside the adapter rod resulting from the adapter tubing coming loose.

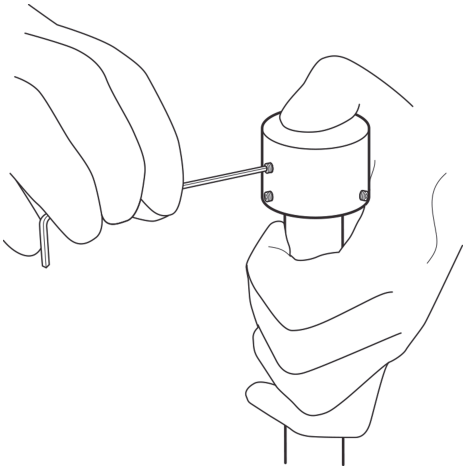

For 140-200 columns

Step	Action
1	Fit the O-ring [602] into the seat of the end cell [402].

Step	Action
2	Carefully screw the nut [405-2] onto the top end cell back by hand. Be careful not to damage the threads in the end cell.

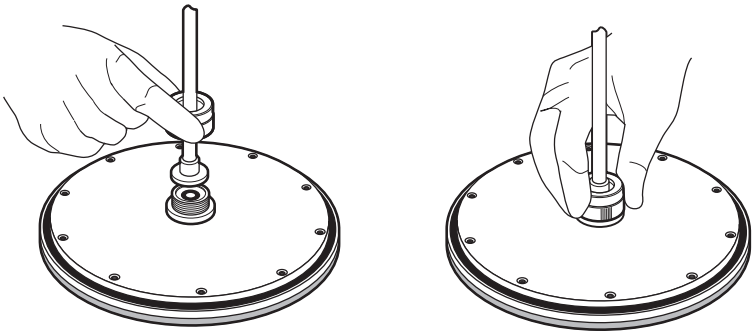

NOTICE
Make sure the adapter tubing is properly positioned when fitting it to the end cell, otherwise it will cause leakage.

3 Reassemble the adapter plate [501] onto the adapter rod [802]. Tighten the six screws [807].

4 Fit the top plate [803] onto the adapter rod [802]. Apply a small amount of ethanol 20% (v/v) on the adapter rod for easier movement of the top plate along the adapter rod.

NOTICE
Always wear gloves when handling the adapter rod to avoid fat from unprotected fingers and scratching the sealing surface.

5 Feed the free end of the adapter tubing [405-1] through the adapter rod [802].

NOTICE
Avoid getting ethanol or other liquids inside the adapter rod. This may otherwise cause corrosion of the metal components of the adapter rod.

Step	Action
6	Fit the adapter rod top [105] onto the tubing [405-1] and reassemble onto the adapter rod [802]. Tighten the three set screws with a hex key so that the rod top is centered on the adapter rod. 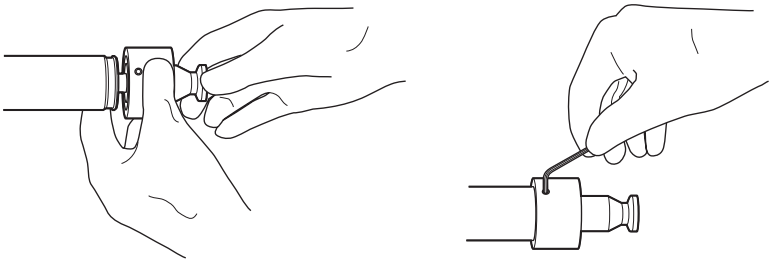

7.3.4 Stainless steel bottom bed support

Disassemble and service

For 50-100 columns

This procedure assumes that the top plate and adapter have been removed from the column, see *Section 5.7 Remove the top plate and adapter, on page 90*.

Step	Action
1	If the column is used together with the pivot stand (standard for 70 and 100 columns, accessory for the 50 column), invert the column in the stand (*Section 4.2 Use of the pivot stand for the 50-200 columns, on page 35*). For AxiChrom 50 column in the foot [123-1], unscrew the bolts [123-2] and lift the column out of the AxiChrom foot and place the column lying down on the flanges.
2	Remove the bottom plate assembly [C] from the column: **a.** Unscrew the six bolts [801] from their holes. **b.** There are three additional threaded holes on the bottom plate assembly. Use three of the removed bolts [801] and insert them into these three holes. **c.** Gently screw in each bolt a little at a time to jack the bottom plate assembly [C] until it slides out from the bottom flange (805). 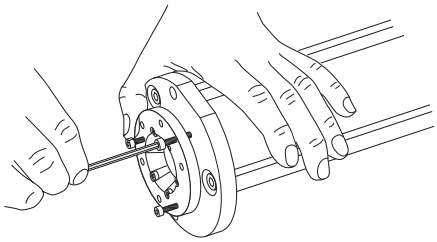
3	Remove and discard the O-ring [606] on the bed support [302].
4	Use a hex key to remove the bolts [403] on the bottom plate [502].

Step	Action
5	Remove the bed support and rinse with water. Inspect it for signs of damage. If necessary replace the entire bed support.

NOTICE

Always wear gloves when handling the bed supports to prevent the transfer of fats and other contaminants from your fingers.

6	Clean the bed support if required, for example due to clogging, or a change of resin type in the column. To clean the bottom bed support use the procedure described for cleaning the adapter bed support using an ultrasonic bath, see *Clean the bed support, on page 177*.
7	Check the O-ring [607] [411b] for visible signs of damage. If damaged, replace it with a new one.

For 140-200 columns

This procedure assumes that the top plate and adapter have been removed from the column, see *Section 5.7 Remove the top plate and adapter,*

Step	Action
1	Invert the column in the pivot stand, see *Section 4.2 Use of the pivot stand for the 50-200 columns, on page 35*.
2	Remove the bottom plate assembly [C] from the column: **a.** Unscrew the eight bolts [801] from their holes.

Step	Action
	b. There are four additional threaded holes on the bottom plate assembly. Use four of the removed bolts [801] and insert them into these four holes.

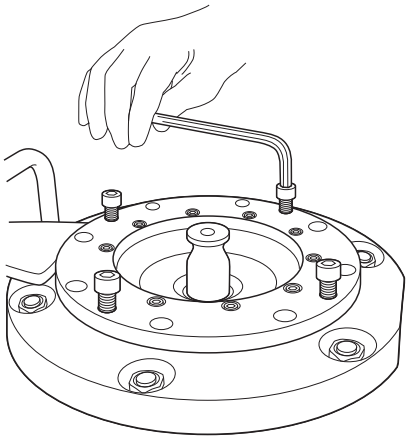

	c. Gently screw in the bolts crosswise a little at a time to jack the bottom plate assembly [C] until it slides out from the bottom flange [805].
3	Rest the bottom plate on the flat side surface. Use a hex key to remove the bolts [403] on the bottom plate [502].
4	Remove the bed support from the bottom plate.
5	Remove the 4 screws from the bottom plate.
6	Remove the O-ring [604b] on the bed support [302].
7	Rinse the bed support with water. Inspect it for signs of damage. If necessary replace the entire bed support.

NOTICE

Always wear gloves when handling the bed support to prevent fat from unprotected fingers coming into contact with the bed support.

8	Clean the bed support if required, for example due to clogging, or a change of resin type in the column. To clean the bottom bed support use the procedure described for cleaning the adapter bed support using an ultrasonic bath, see *Clean the bed support, on page 177*.
9	Check the O-ring [411b] on the end cell for visible signs of damage. If damaged replace it with a new one.

Reassemble

For 50-100 columns

Step	Action
1	Fit the O-ring [411b] into the groove in the bottom plate [502] for 50 and 70 columns, or the end cell [404] for the 100 column.
2	Fit a new O-ring [606] onto the bed support [302].
3	Refit the bed support [302] onto the bottom plate [502] being careful to align the holes around the circumference on both parts.

NOTICE

The bed support must be mounted in the position according to illustration A below before the bolts [403] are tightened. Damage to the bed support can occur if the bed support slides on only partway, as in illustration B below. This implies that the O-ring [607] [411b] has snapped off the groove in the adapter for the 50 or 70 column, or the end cell for the 100 column. Tightening of the bolts [403] will cause the O-ring [607] [411] to be pushed onto the bed support and damage the bed support.

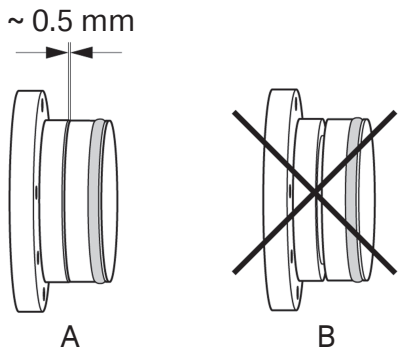

Note:

For 50 and 70 columns: *The 10 and 20 µm bed supports are not interchangeable and need to be assembled with their respective adapters.*

4	Refit the bolts [403] on the bottom plate [502] using a torque driver to tighten each bolt a little at a time crosswise to 0.5 Nm for 50 and 70 columns and 1 Nm for the 100 column until there is no gap between the bed support and bottom plate. Do not overtighten.

Step	Action
5	Lubricate the inside of the tube end [201], and the O-ring [606] of the bottom plate assembly [C] and refit it onto the column. **NOTICE** Do not physically push the bottom plate assembly into the column. Carefully place it so that the holes on the circumference are aligned and tighten the bolts [801] crosswise.

For 140-200 columns

Step	Action
1	Fit the O-ring [411b] into the groove in the end cell [404].
2	Fit a new O-ring [604b] onto the bed support [302].
3	Rest the bottom plate on the flat side surface.
4	Fit the end cell onto the bottom plate [502].

Step	Action
5	Refit the bed support [302] onto the end cell in the bottom plate [502] being careful to align the holes around the circumference on both bed support and bottom plate.

NOTICE

The bed support shall be mounted in the position according to illustration (A) below before the bolts [403] are tightened. Damage to the bed support can occur if the bed support slides on only partway, as in illustration (B) below. This implies that the O-ring [404] has snapped off the groove in the end cell. Tightening of the bolts will cause the O-ring to be pushed onto the bed support and damage the bed support.

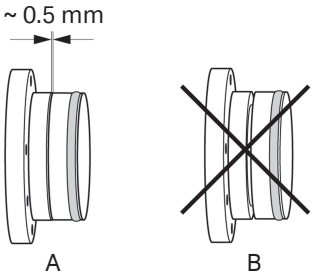

NOTICE

Do not roll the O-ring down the bed support as this may lead to twisting of the O-ring, which may cause leakage.

6 Refit the bolts [403] on the bottom plate [502] using a torque driver to tighten each bolt a little at a time crosswise to 1 Nm.

7 Lubricate the inside of the tube end, and the O-ring [606] of the bottom plate assembly [C] and refit it onto the column, and make sure that the bottom plate assembly enters the glass tube straight.

NOTICE

Do not physically push the bottom plate assembly into the column.

Step	Action
	NOTICE Mount the bottom plate assembly horizontally in the column tube to avoid cracking and damage of the glass tube.
8	Carefully place the bottom plate assembly so that the holes on the circumference are aligned and tighten the bolts [801] crosswise a little at a time. Secure with a wrench but do not overtighten.

7.3.5 Plastic adapter bed support

Remove the plastic bed support

For 50-200 columns

This procedure assumes that the top plate and adapter have been removed from the column, see *Section 5.7 Remove the top plate and adapter, on page 90*.

To remove only the plastic bed support:

Step	Action
1	Remove the snap ring [421a] and the bed support [301] from the distributor [402]. Discard both the snap ring and the bed support. **For 50 and 70 columns:** Remove and discard the support net [422a] as well. The illustrations below show how this is done by hand (A) or by using the removal tool (B).

A

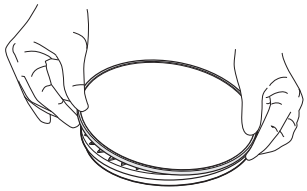

B

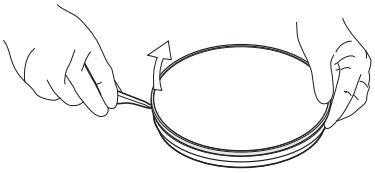

Service the distributor, scraper seal, and adapter tubing

For 50-100 columns

Step	Action
1	Undo the five stop screws [106] on the adapter rod top [105] using a hex key. Remove the adapter rod top. ***Note:*** *It is recommended that the stop screws are not fully removed from the adapter rod top to help avoid losing them.*
2	Use a hex key to remove the screws [401], washers [412] and O-rings [413] from the adapter [501].

Step	Action
3	Gently pull on the distributor to withdraw a length of the tube [405-1] from inside the adapter rod [802].

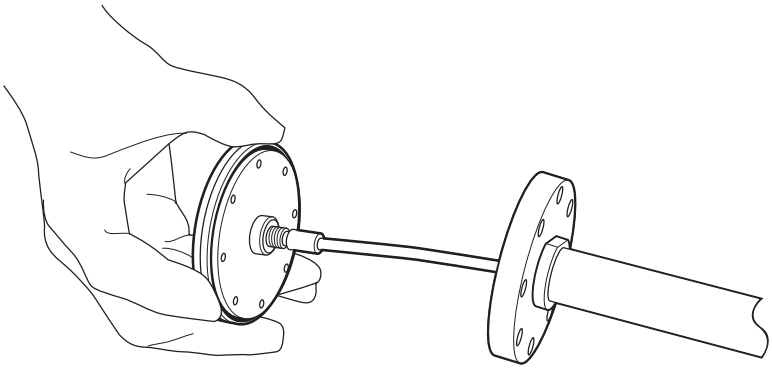

4	Unscrew the adapter tube [405-1] from the top distributor [402] by hand.

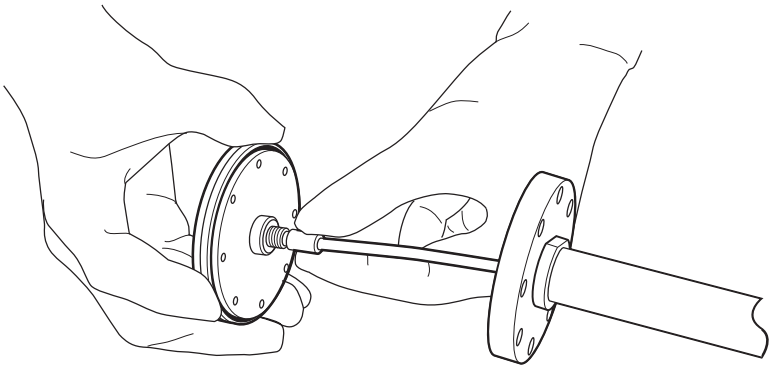

5	Pull out the adapter tube [405-1] from the top end of the adapter rod [802]. Unscrew the tube connection [109] from the adapter tubing [405-1]. Check the tubing and O-rings [602a, b] for visible signs of damage. Replace if necessary.
6	Remove the scraper seal [605] and O-ring [604] by gently moving them up the distributor a bit at a time around the circumference. ***Note:*** *The O-ring is secured within the scraper seal so they will most likely be removed together.*
7	Check the scraper seal for scratching and wear, and the O-ring for twisting and wear. If damaged or if there is any doubt about their integrity, discard them.

Step	Action
8	Rinse the distributor with water and then inspect for signs of damage. If necessary replace the distributor.
9	Check the adapter plate O-ring [127] for visible signs of damage. If damaged replace it with a new one.

For 140-200 columns

Step	Action
1	Use a hex key to remove the screws [401], washers [412] and O-rings [413] from the adapter.
2	Gently pull on the distributor to withdraw a length of the tube [405-1] from inside the adapter rod [802].

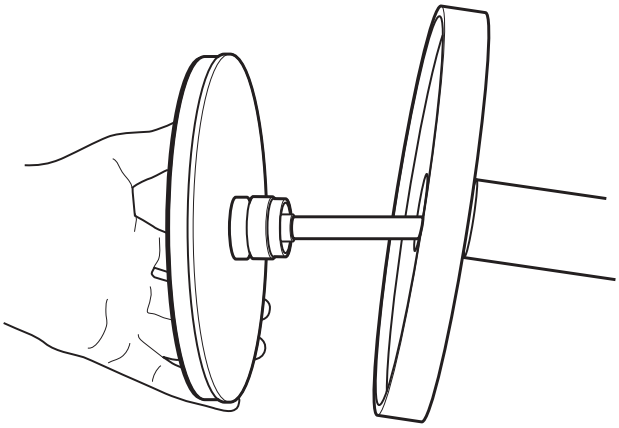

Tip:
Gently push on the tube end in the adapter rod top to help ease the end cell out of the adapter rod.

3	Unscrew the adapter tube [405-1] from the top distributor [402] by hand. Check the tubing [405-1] and O-ring [602] for visible signs of damage. Replace if necessary.
4	Remove the scraper seal [605] and O-ring [604] by gently moving them up the distributor a bit at a time around the circumference.
5	Check the scraper seal for scratching and wear, and the O-ring for twisting and wear. If damaged or if there is any doubt about their integrity, discard them.

Step	Action
6	Rinse the distributor with water and then inspect for signs of damage. If necessary replace the distributor.

Reassembling the plastic adapter bed support

For 50-100 columns

Step	Action
1	Fit the scraper seal [605] and O-ring [604] using the following procedure:

NOTICE

Improper fitting of the scraper seal and O-ring, or damage caused to either part, may cause leakage. Follow the instructions carefully.

a. Place the adapter distributor onto some plastic foil on a flat surface. Lubricate the O-ring on the bed support with 20% (v/v) ethanol.

b. Fit the scraper seal [605] onto the distributor [402] with the flat surface face downwards until it sits on the distributor flange. Make sure that the flat underside of the scraper seal is placed in contact with the flange of the distributor.

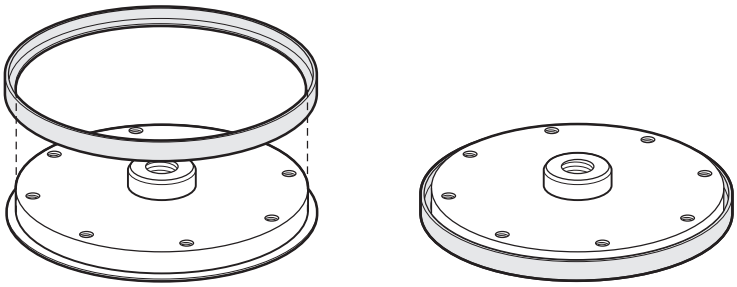

Step	Action
	c. Fit the O-ring [604] by gently moving it down the distributor a bit at a time around the circumference. Use 20% (v/v) ethanol for lubrication. This may be achieved by gently pulling a section of the O-ring out from the distributor wall and moving it downwards a fraction, and then repeating on an adjacent section of the O-ring and so on. ***Note:*** *The scraper seal can be mounted in a plastic container filled with water to facilitate the placement of the scraper seal and O-ring and to avoid trapping air.* **NOTICE** Do not roll the O-ring down the distributor as this may lead to twisting of the O-ring, which can cause leakage. Continue until the O-ring has come into contact with the top of the wall of the scraper seal [605]. 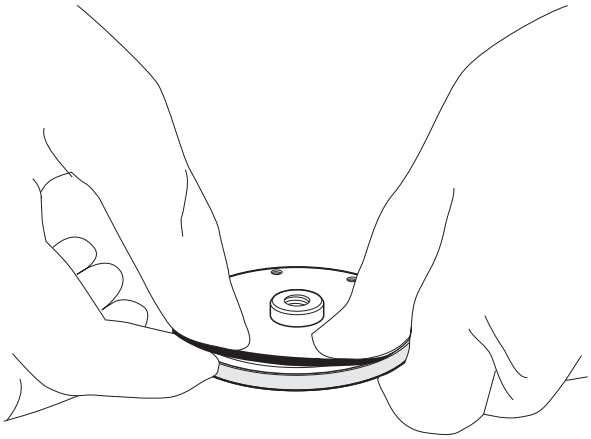

Step	Action
	d. Use the O-ring mounting tool to push the O-ring into the groove created by the scraper seal and the wall of the distributor. Press down one part of the O-ring and then at an opposite point on the O-ring circumference. Continue until the O-ring is located within the groove.

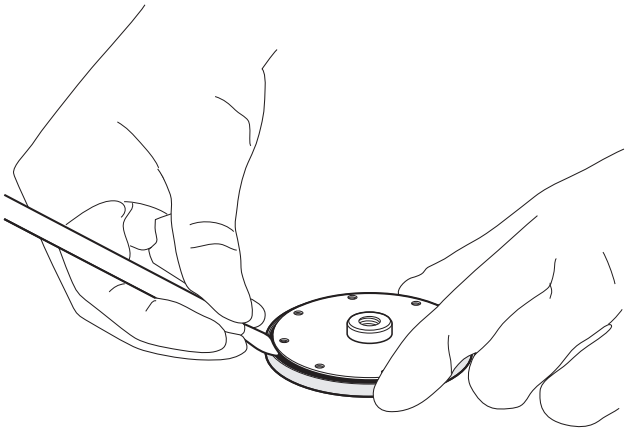

e. Make sure that the O-ring sits evenly in the groove (A) and is not ballooning out at any point (B). Push the mounting tool on top of the O-ring when in place in the groove and then draw the mounting tool around the circumferance of the O-ring while applying pressure downwards. Draw the mounting tool in both directions around the O-ring circumferance. This is to release any tensions in the O-ring arising from the assembly of the scraper seal and the O-ring onto the adapter distributor.

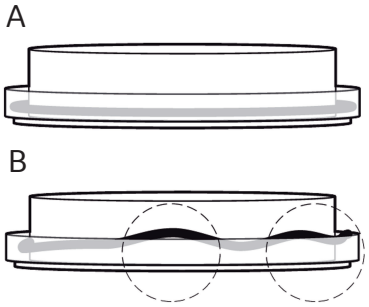

2 Refit the O-rings on each end of the adapter tube [405-1].

Step	Action
3	Fit the tube connection [109] on the adapter tube. ***Note:*** *The tube connection [109] must be connected in the correct direction, i.e. the end that has the connector with a smaller diameter shall be connected to the system end (see exploded diagrams in Appendix A-C according to the column type).*
4	Feed the free end of the adapter tube through the top of the adapter rod until it becomes visible and points out through the middle hole of the adapter. Make sure that the O-ring [127] is in place.
5	Refit the adapter tube onto the distributor.
6	Refit the distributor [402] onto the adapter [501] being careful to align the holes around the circumference of both parts.
7	Use a hex key to carefully refit the screws [401], washers [412] and O-rings [413] on the adapter. Using a torque driver, tighten each bolt little at a time crosswise to 1 Nm for the 100 column, and to 0.5 Nm for the 50 and 70 column. When tightened, there will be a gap of approximately 1 mm between the bed support and the adapter.
8	If necessary, remove and replace the O-ring [104] in the adapter rod top. ***Note:*** *This O-ring does not normally suffer from wear and its replacement is a difficult procedure.*

Step	Action
9	Fit the adapter rod top onto the adapter rod and tighten the three lower screws so that the rod top is centered on the adapter rod. Tighten the two upper stop screws [106] with an hex key to fix the adapter tubing in the adapter rod.

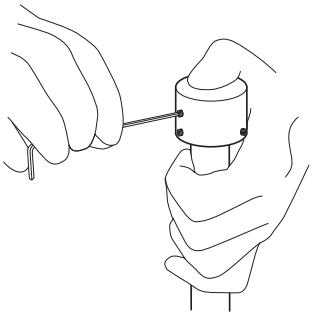

CAUTION

After the adapter rod top has been fixed to the adapter tubing do not loosen the adapter from the adapter rod. This may otherwise cause leaks inside the adapter rod resulting from the adapter tubing coming loose.

10 **a. For 50 and 70 columns:**

Flush the adapter downflow with 20% ethanol to make sure that the adapter and tubing are filled with liquid and free from air.

Place a new bed support in the snap ring. Place a new support net on the distributor. Fit the bed support and snap ring assembly onto the distributor. Make sure that the edge of the support net is not trapped by the snap ring and that the bed support is in contact with the distributor all around the circumference.

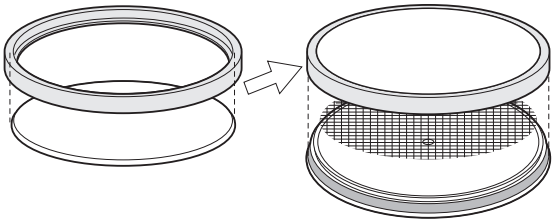

Note:

Check that the snap ring is correctly and evenly mounted around the whole circumference of the distributor.

Step	Action
	b. For 100 column: Flush the adapter downflow with 20% ethanol to make sure that the adapter and tubing are filled with liquid and free from air. Place a new bed support in the snap ring. Fit the bed support and snap ring assembly onto the distributor. Make sure that the bed support is in contact with the distributor all around the circumference. 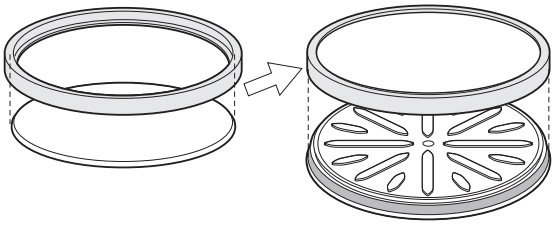 ***Note:*** *Check that the snap ring is correctly and evenly mounted around the whole circumference of the distributor.*

For 140-200 columns

Step	Action
1	Fit the scraper seal [605] and O-ring [604a] onto the distributor [402] using the following procedure: **a.** Place the distributor into a plastic container with a flat bottom. Fill the container with water and put the distributor at the bottom with the flat surface facing downwards.

Step	Action
	b. Place the O-ring inside the seal and simultaneously fit the scraper seal [605] and O-ring [604a] onto the distributor. Gently move the scraper seal and O-ring down, a little bit at the time around the circumference, towards the flange of the distributor. Make sure that the flat surface of the seal is placed to come in contact with the flange of the distributor all around the circumference.

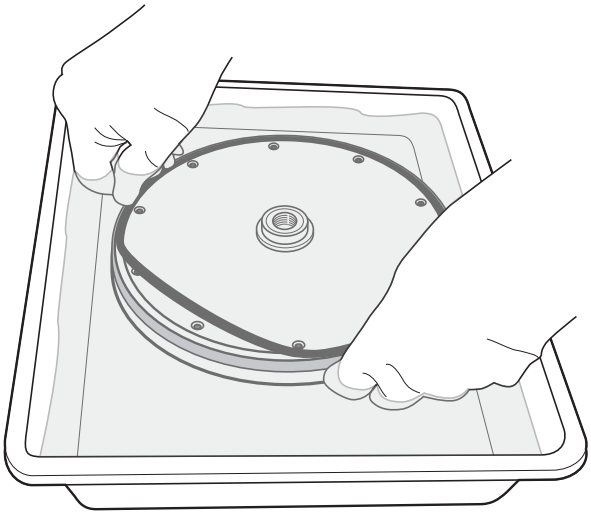

NOTICE
Do not roll the O-ring down the distributor as this might lead to twisting of the O-ring, which can cause leakage.

Step	Action
	c. Use a finger or the O-ring mounting tool to push the O-ring around the circumference until it is evenly located into the groove.

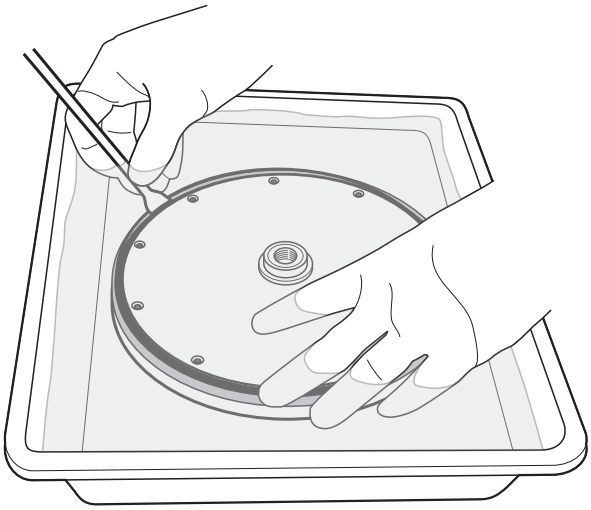

d. Make sure that the O-ring sits evenly in the groove (A) and is not ballooning out at any point (B), and that the scraper seal is tightly pressed against the flange of the distributor.

Note:

The O-ring mounting tool can be used to facilitate fitting of the O-ring in place. Push the mounting tool on top of the O-ring when in place in the groove and then draw the mounting tool around the circumference of the O-ring while applying pressure downwards.

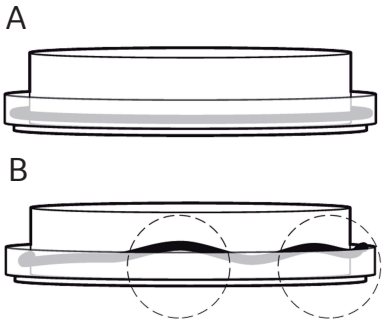

2 Fit the O-ring [602] into the seat of the distributor [402].

Step	Action
3	Carefully screw the adapter tubing nut [405-2] onto the top distributor back by hand. Be careful not to damage the threads in the distributor.

NOTICE
Make sure the adapter tubing is properly positioned when fitting it to the distributor, otherwise it will cause leakage.

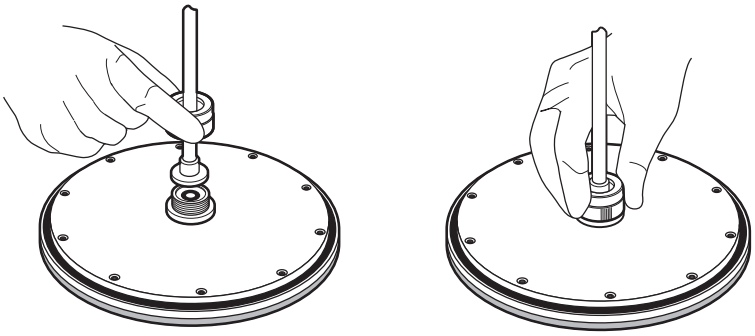

4	Feed the free end of the adapter tubing [405-1] through the adapter rod [802]. Make sure that it seals in the adapter rod top.
5	Refit the distributor onto the adapter [501] being careful to align the holes around the circumference of the distributor and adapter.
6	Use a hex key to carefully refit the screws [401], washers [412], and O-rings [413] on the adapter. Using a torque driver, tighten each bolt a little at a time crosswise to 1 Nm. When tightened, there will be a gap of approximately 1 mm between the distributor and the adapter.

Step	Action
7	Flush the adapter downflow with 20% ethanol to make sure that the adapter and tubing are filled with liquid and free from air. Place a new bed support [301] in the snap ring [421a]. Fit the bed support and snap ring assembly onto the distributor. Make sure that the bed support is in contact with the distributor all around the circumference and that the snap ring is properly fitted in its groove on the distributor. 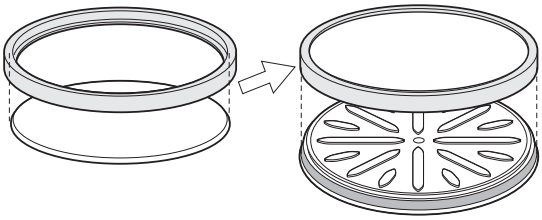

7.3.6 Adapter rod and top plate (plastic bed support)

This procedure assumes that the top plate and adapter have been removed from the column, see *Section 5.7 Remove the top plate and adapter, on page 90*. It is also required that the adapter distributor, adapter rod top and adapter tubing are removed for this operation, see *Section 7.3.5 Plastic adapter bed support, on page 201*.

Disassemble and service

For AxiChrom 50-100 columns:

Step	Action
1	Unscrew the adapter [D] from the adapter rod [802]; Hold with one wrench at each key grip. Carefully use the tools to obtain increased leverage when unscrewing the adapter. **For 50-70 columns:** 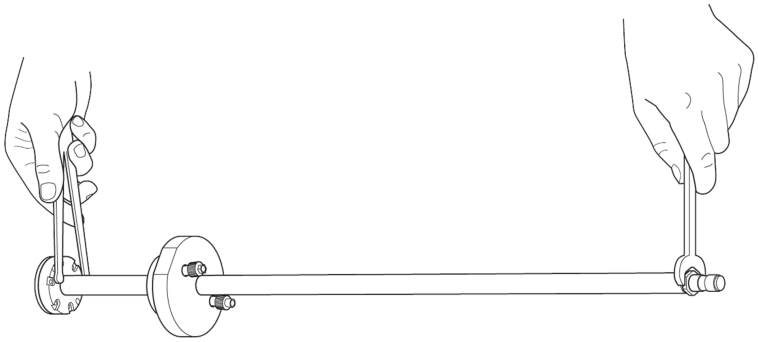 **For 100 columns:** 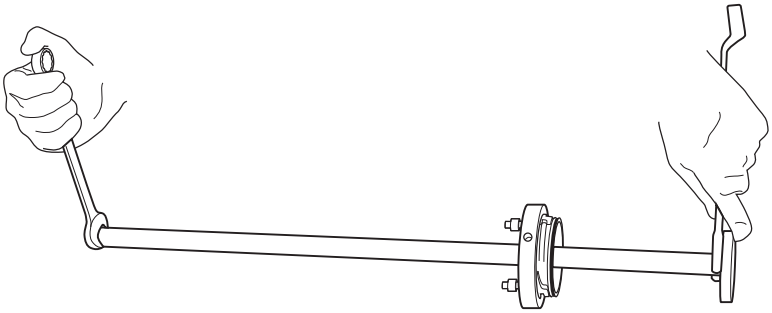

Step	Action
2	Slide the top plate [803] down the length of the adapter rod [802] and remove. Apply a small amount of ethanol 20% (v/v) on the adapter rod for easier movement of the top plate along the adapter rod. **NOTICE** The adapter rod seal [103], may be damaged if the top plate is removed over the key handle on the adapter rod.
3	Check the O-ring [108] on the outer rim of the top plate for visible signs of damage. Replace if necessary.
4	If necessary, remove and replace the adapter rod seal [103] if it has been damaged. ***Note:*** *The O-rings in the top plate are difficult to remove and should only be replaced if part of an annual service, or in case of visible damage, or suspected leakage.*
5	Check the O-ring [111] on the threaded end of the adapter for visible signs of damage. Replace the O-ring if necessary: **a.** Remove the old O-ring. **b.** Cover the threads on the adapter with sealing film. **c.** Take a new O-ring and roll it onto the adapter. **d.** Remove the sealing film.

For AxiChrom 140 and 200 columns:

Step	Action
1	Undo the six screws [807] and remove the adapter plate [501]. Check the O-ring [111] and replace if necessary.
2	Undo the three set screws [106] on the adapter rod top [105] using a hex key. Remove the adapter rod top. ***Note:*** *It is recommended that the set screws are not fully removed from the adapter top to avoid losing them.*

Step	Action
3	If necessary, remove and replace the O-ring [104] in the adapter rod top. ***Note:*** *This O-ring does not normally suffer from wear and its replacement is a difficult procedure.*
4	Slide the top plate [803] down the length of the adapter rod [802] and remove. Apply a small amount of ethanol 20% (v/v) on the adapter rod for easier movement of the top plate along the adapter rod.
5	Check the O-ring [108] on the outer rim of the top plate for visible signs of damage. Replace if necessary.
6	Remove and replace the adapter rod gasket [103] if it has been damaged. ***Note:*** *The gasket and the guide ring in the top plate are difficult to remove and should only be replaced if part of an annual service, or in case of visible damage, or suspected leakage.*

Reassembling the adapter rod and top plate

Reassemble

For 50-100 columns

Step	Action
1	Slide the top plate [802] onto the adapter rod [803] from the threaded end. Apply a small amount of ethanol 20% (v/v) on the adapter rod for easier movement of the top plate along the adapter rod. **NOTICE** Always wear gloves when handling the adapter rod to avoid fat from unprotected fingers and scratching the sealing surface.
2	Screw the adapter rod [803] onto the adapter [501]. Tighten by holding the adapter rod with a wrench and then tighten using another wrench. ***Note:*** *The parts can loosen after using the column several times. Check that the adapter rod is tight before performing each packing procedure.*

For 140 and 200 columns

Step	Action
1	Reassemble the adapter plate [501] onto the adapter rod [802]. Tighten the six screws [807].
2	Fit the top plate [803] onto the adapter rod [802]. Apply a small amount of ethanol 20% (v/v) on the adapter rod for easier movement of the top plate along the adapter rod.

NOTICE
Always wear gloves when handling the adapter rod to avoid fat from unprotected fingers and scratching the sealing surface.

NOTICE
Avoid getting ethanol or other liquids inside the adapter rod. This may cause corrosion of the metal components of the adapter rod.

3	Fit the adapter rod top [105] onto the tubing [802]. Tighten the three set screws with a hex key so that the rod top is centered on the adapter rod.

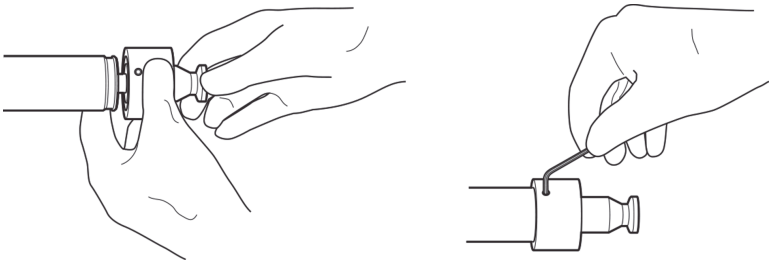

7.3.7 Plastic bottom bed support

Disassemble and service

For 50-100 columns

This procedure assumes that the top plate and adapter have been removed from the column, see *Section 5.7 Remove the top plate and adapter, on page 90*.

Step	Action
1	If the column is used together with the pivot stand (standard for 70 and 100 columns, accessory for the 50 column), invert the column in the stand (*Section 4.2 Use of the pivot stand for the 50-200 columns, on page 35*). For AxiChrom 50 column in the foot [123-1], unscrew the bolts [123-2] and lift the column out of the AxiChrom foot and place the column lying down on the flanges.
2	Remove the bottom plate assembly [C] from the column: **a.** Unscrew the six bolts [801] from their holes. **b.** There are three additional threaded holes on the bottom plate assembly. Use three of the removed bolts [801] and insert them into these three holes. **c.** Gently screw in each bolt a little at a time to jack the bottom plate assembly [C] until it slides out from the bottom flange (805). 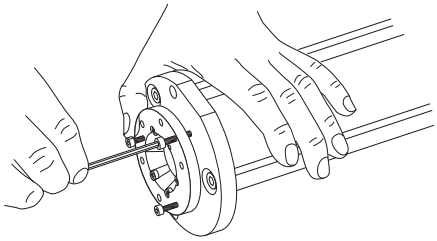
3	Remove the snap ring [421b] and the bed support [302] from the distributor [404], see *Remove the plastic bed support, on page 201*. Discard both the snap ring and the bed support. **For 50 and 70 columns:**, remove and discard the support net [422b] as well.
4	Remove and discard the O-ring [606] on the distributor.
5	Use a hex key to remove the bolts [403] on the bottom plate [502].

Step	Action
6	Remove the distributor and rinse with water. Inspect it for signs of damage. If necessary, replace the entire distributor.

NOTICE

Always wear gloves when handling the bed supports, distributors, and bed supports to prevent the transfer of fats and other contaminants from your fingers.

For 140-200 columns

This procedure assumes that the top plate and adapter have been removed from the column, see *Section 5.7 Remove the top plate and adapter, on page 90*.

Step	Action
1	Invert the column in the pivot stand, see *Section 4.2 Use of the pivot stand for the 50-200 columns, on page 35*.
2	Remove the bottom plate assembly [C] from the column: **a.** Unscrew the eight bolts [801] from their holes. **b.** There are four additional threaded holes on the bottom plate assembly. Use four of the removed bolts [801] and insert them into these four holes.

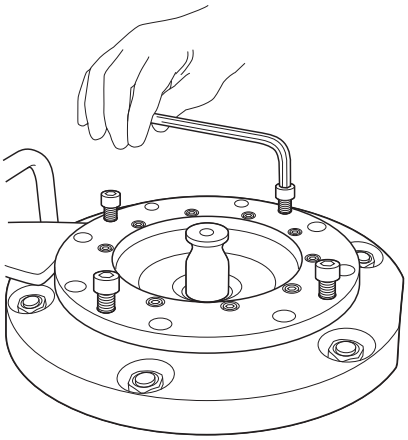

	c. Gently screw in the bolts crosswise a little at a time to jack the bottom plate assembly [C] until it slides out from the bottom flange [805].
3	Remove the snap ring [421b] and the bed support [302] from the distributor [404] (see the illustration in *Remove the plastic bed support, on page 201*). Discard the snap ring and the bed support.

Step	Action
4	Rest the bottom plate on the flat side surface. Use a hex key to remove the bolts [403] on the bottom plate [502].
5	Remove the distributor from the bottom plate. Remove the 4 screws from the bottom plate.
6	Remove the O-ring [604b] from the distributor.

NOTICE

Always wear gloves when handling the distributor to prevent fat from unprotected fingers coming into contact with the bed support.

Reassemble

For 50-100 columns

Step	Action
1	Fit a new O-ring [606] onto the distributor [404].
2	**a. For 50-70 columns:** Place a new bed support in the snap ring. Place a new support net on the distributor. Fit the bed support and snap ring assembly onto the distributor. Make sure that the edge of the support net is not trapped by the snap ring and that the bed support is in contact with the distributor all around the circumference. ***Note:*** *Check that the snap ring is correctly and evenly mounted around the whole circumference of the distributor.*

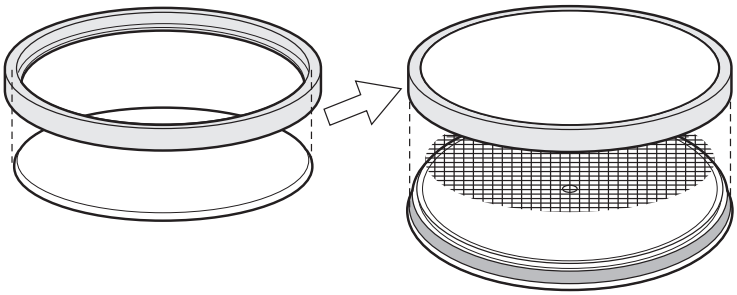

Step	Action
	b. For a 100 column: Place a new bed support in the snap ring. Fit the bed support and snap ring assembly onto the distributor. Make sure that the bed support is in contact with the distributor all around the circumference. ***Note:*** *Check that the snap ring is correctly and evenly mounted around the whole circumference of the distributor.* 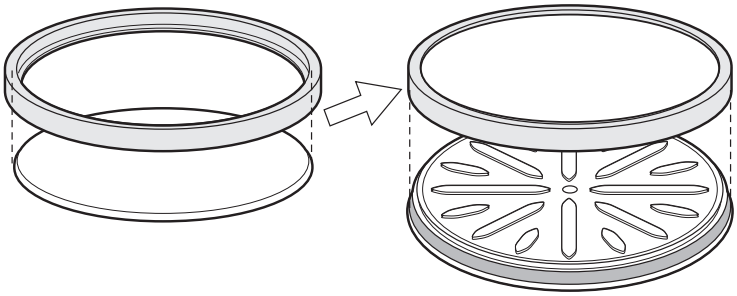
3	Refit the distributor onto the bottom plate [502] being careful to align the holes around the circumference on both parts.
4	Refit the bolts [403] on the bottom plate [502] using a torque driver to tighten (0.5 Nm) each bolt a little at a time crosswise. Do not overtighten.
5	Lubricate the inside of the tube end [201], and the O-ring [606] of the bottom plate assembly [C] and refit it onto the column. Tighten the screws crosswise and a little at a time. **NOTICE** Do not physically push the bottom plate assembly into the column. Carefully place it so that the holes on the circumference are aligned and tighten the bolts [801] crosswise.

For 140-200 columns

Step	Action
1	Fit the O-ring [604b] onto the distributor [404].

NOTICE
Avoid rolling the O-ring down the distributor as this may lead to twisting of the O-ring, which may cause leakage.

2 Rest the bottom plate on the flat side surface.

3 Fit the distributor onto the bottom plate [502] carefully aligning the holes around the circumference of the distributor and the bottom plate.

4 Refit the bolts [403] on the bottom plate [502] using a torque driver to tighten each bolt a little at a time crosswise to 1 Nm.

5 Place a new bed support [302] in the snap ring [421b]. Fit the bed support and snap ring assembly onto the distributor. Make sure that the bed support is in contact with the distributor all around the circumference and that the snap ring is fitted in its groove on the distributor.

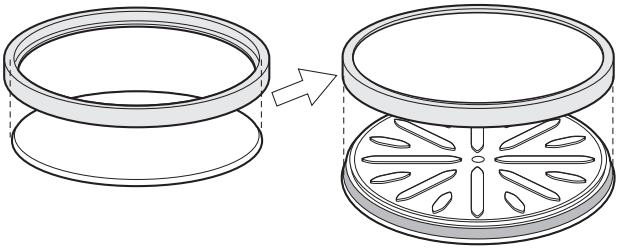

6 Lubricate the inside of the tube end and the O-ring [604b] of the bottom plate assembly [C] and refit it onto the column, and make sure that the bottom plate assembly enters the glass tube straight.

NOTICE
Do not physically push the bottom plate assembly into the column.

NOTICE
Mount the bottom plate assembly horizontally in the column tube to avoid cracking and damage of the glass tube.

Step	Action
7	Carefully place the bottom plate assembly so that the holes on the circumference are aligned and tighten the bolts [801] crosswise a little at a time.

7.3.8 Column tube assembly

Disassemble the column tube assembly

This procedure assumes that the top plate and adapter and the bottom plate assembly have been removed from the column, see *Section 5.7 Remove the top plate and adapter, on page 90* and *Section 7.3.4 Stainless steel bottom bed support, on page 194*.

For 50-200 columns:

Step	Action
1	Remove the complete check valve [116] for all columns, and also the check valve adapter [124] for the 100-200 columns.
2	Remove the column tube assembly [B] from the pivot stand, see *Section 4.2.4 Remove the column from the AxiChrom pivot stand, on page 39*.
3	Turn the column tube assembly upside down and carefully rest the column on the top bayonet/top flange [804].

NOTICE
Place the column tube on a stable surface and take care not to knock over the column while working with it.

4	Use a socket wrench to undo and remove the nuts [806] and washers [119] connected to the tie bars underneath the bottom flange [805]. Carefully remove the bottom flange.

NOTICE
It is very important to loosen crosswise and in steps, so that the glass tube does not break.

5	Unscrew 1-2 tie bars, see *Section 7.3.9 Replace the tie bars, on page 229*.
6	Carefully remove the column tube [201].
7	Check the O-ring [114a] and [114b] in the bottom flange and top bayonet/top flange for visible signs of damage. Replace if necessary:

Step	Action
	a. Use a plastic implement or the removal tool to remove the O-rings from the groove. **NOTICE** Avoid scratching or in any other way damaging the flange.
	b. Check the tube supports [115a] and [115b] for signs of damage. If necessary replace the tube support.
	c. Fit in a new O-ring in the groove in the top and bottom, making sure to press it in to the groove at all points along its circumference.
8	Check the tie bars [901] for any signs of visible damage and that they sit securely in the top bayonet/top flange [804]. If necessary replace damaged tie bars, see *Section 7.3.9 Replace the tie bars, on page 229*.
9	Check the column tube [201] for any signs of damage. If necessary replace the column tube.

Reassemble the column tube assembly

For 50-200 columns:

Step	Action
1	Carefully insert the column tube [201] so that it comes into contact with the top bayonet/top flange [804]. Make sure the column tube is assembled in the correct direction.
2	Refit the tie bars [901], see *Section 7.3.9 Replace the tie bars, on page 229*.
3	Place the bottom flange [805] over the threaded ends of the tie bars [901] and into contact with the column tube. Make sure that the planar surface on the outer rim of the bottom flange is aligned with the planar surface of the top bayonet/top flange and that the holes for the pivot stand are aligned.
4	Place the washers [119] onto the tie bars at the bottom flange and then loosely screw the nuts [806] onto the threads. Do not tighten.
5	Insert a centering tool in one end of the column tube.

Step	Action
6	Hold the column at the centering tool and one of the flanges (A). Carefully lift the column tube assembly and lay it on its planar side (B). Make sure that the glass column tube does not become damaged due to the looseness of the flanges.

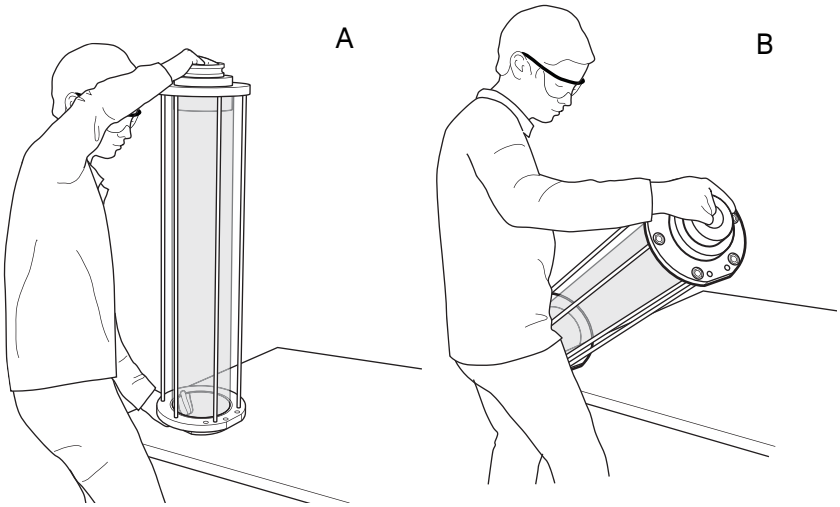

NOTICE

Be careful when laying down the column. Make sure that the glass tube does not touch the tie bars and the flanges.

7	Make sure that the tie bars [901] are straight and parallel by placing the column tube assembly [B] so that the planar surface on the top bayonet/top flange [804] and bottom flange [805] are in contact with the resting surface.
8	Insert the other centering tool into the other end of the column tube. For the top of the column (A) the centering tool shall be inserted so that the second mark on the tool is in line with the top bayonet/top flange. For the bottom of the column B the centering tool shall be inserted so that the first mark on the tool is in line with the bottom flange. **AxiChrom 50 to 100:**

Step	Action

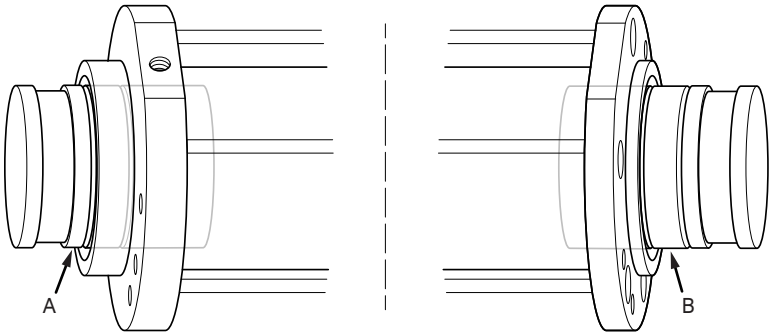

AxiChrom 140 and 200:

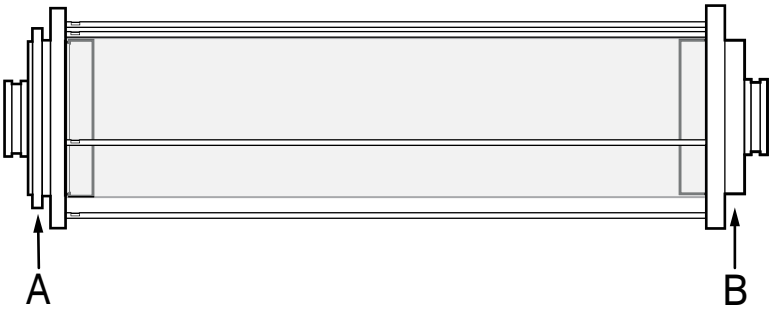

Note:

It is important that the centering tools are placed into the column tube to the correct marking point at the respective ends, otherwise the column will not be correctly centered.

9 Rotate the column tube so that the scale is set in the desired position.

Note:

There are different scales for stainless steel and plastic bed supports. Make sure that the correct scale is visible.

10 Tighten the nuts [806] crosswise at the bottom flange a little at a time - use a torque wrench and tighten first to 0.5 Nm, and check that it is possible to move the top and bottom centering tools in and out of the column. If they cannot be moved the column tube may not be properly aligned. If so, undo the nuts [806] and gently twist the top and bottom to improve the alignment.

Step	Action
11	Continue to tighten the bolts crosswise, increasing the torque successively to the value given below. 50, 70, and 100 columns: 4.0 Nm 140 column: 5.0 Nm 200 column: 7.0 Nm
12	Check that it is possible to move the top and bottom centering tool in and out of the column.

7.3.9 Replace the tie bars

The following setup assumes that the bottom flange and column tube have been removed from the column tube assembly, see *Section 7.3.8 Column tube assembly, on page 224*.

For AxiChrom 50-200 columns:

Step	Action
1	Use a wrench to loosen and unscrew the damaged tie bar(s) [901] connected to the top bayonet/top flange [804].
2	Screw in a new tie bar to one of the tie bar holes by hand and tighten using a wrench at the key handles. ***Note:*** *One of the ends of each tie bar has a short flattened length before the thread. This flattened end should be used to screw into the top flange/top bayonet.*
3	Repeat for other tie bars as appropriate.
4	Continue reassembly of the column, see *Section 7.3.8 Column tube assembly, on page 224*.

7.3.10 Rupture discs

For AxiChrom 140 and 200 only:

If the rupture disc has not ruptured, it can be removed, inspected, and reinstalled provided that the following conditions are met:

- The dome of the rupture disc is not damaged in any way.
- The rupture disc must be free of foreign material.
- Corrosion is not evident.
- The gasket is intact and is not nicked or scratched.

The rupture disc may be cleaned in alcohol using slight agitation, and then air dried.

Note: *Visual inspection will not reveal the effect of process conditions on service life. When in doubt, install a new disc.*

7.3.11 Check valve in the hydraulic chamber inlet

For 50 and 70 columns

Step	Action
1	Unscrew the check valve housing [116] from the top bayonet [804].
2	Use a thin plastic implement to remove the first O-ring [117 b], check valve [118], and second O-ring [117a].
3	Fit in a new O-ring [117a].
4	Fit in a new check valve [118]. The arrow on the check valve represents the flow direction and shall be fitted so that it points inwards to the column.

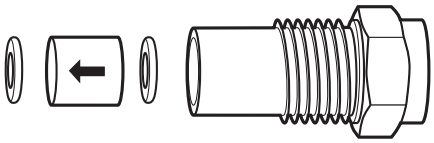

CAUTION

To avoid risks caused by over-pressure the check valve shall be fitted into the valve housing such that the direction of the printed arrow on the valve points inwards to the column.

5	Fit in a new O-ring [117b] on top of the check valve.
6	Screw the check valve housing into the top bayonet.

For the 100 column

Step	Action
1	Unscrew the check valve adapter [124] from the top bayonet [804].
2	Unscrew the check valve housing [116] from the check valve adapter [124].

Step	Action
3	Fit in a new check valve [118]. The arrow on the check valve represents the flow direction and shall be fitted so that it points inwards to the column.

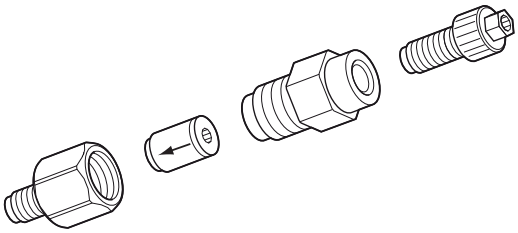

CAUTION

To avoid risks caused by over-pressure the check valve shall be fitted into the valve housing such that the direction of the printed arrow on the valve points inwards to the column.

4	Screw the check valve adapter back into the top bayonet.
5	Screw the check valve housing back into the check valve adapter. Be careful not to over tighten.

For 140 and 200 columns

Step	Action
1	Unscrew the check valve housing [116] from the check valve adapter [124].

Step	Action
2	Fit in a new check valve [118]. The arrow on the check valve represents the flow direction and shall be fitted so that it points inwards to the column.

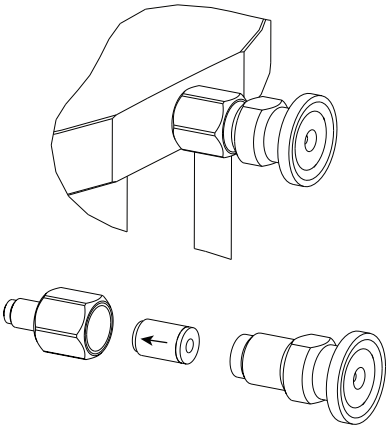

CAUTION

To avoid risks caused by over-pressure the check valve shall be fitted into the valve housing such that the direction of the printed arrow on the valve points inwards to the column.

3	Screw the check valve adapter back into the top flange.
4	Screw the check valve housing back into the check valve adapter. Be careful not to overtighten.

7.3.12 Replace pivot stand wheels for 140 and 200 columns

This procedure assumes that the column has been removed from the pivot stand, see *Section 4.2.4 Remove the column from the AxiChrom pivot stand, on page 39*.

Step	Action
1	Place the pivot stand lying down on the floor.
2	Loosen the locking nuts using a wrench key.
3	Unscrew the wheels using a wrench key. Replace the wheels if necessary with new wheel kits [701-3].

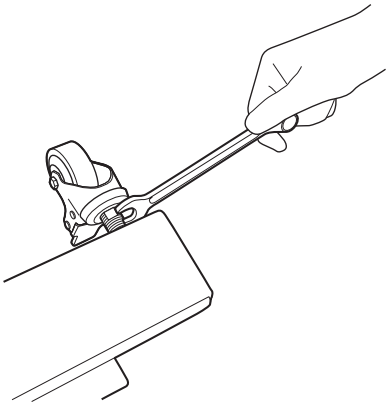

7.4 Clean before planned service

Cleaning before planned maintenance/service

To ensure the protection and safety of service personnel, all equipment and work areas must be clean and free of any hazardous contaminants before a Service Engineer starts maintenance work.

Please complete the checklist in the *On Site Service Health and Safety Declaration Form* or the *Health and Safety Declaration Form for Product Return or Servicing*, depending on whether the instrument is going to be serviced on site or returned for service, respectively.

Perform a drainage test

The bed support can become clogged after many packing procedures. Typical signs of bed support clogging are increasing pressure drop, tailing peaks, and sometimes even shoulders on the peaks. To test if the bed supports are clogged a drainage test can be performed.

Step	Action
1	Empty the column (see *Section 6.14 Emptying a column on a pivot stand, on page 167*). Plug the bottom outlet.
2	Remove the adapter bed support from the adapter, see *Section 7.3.2 Stainless steel adapter bed support, on page 176* or *Section 7.3.5 Plastic adapter bed support, on page 201* and remove the scraper seal and O-ring.
3	Pour water into the column (approx. 25 cm height).
4	Place the adapter bed support at the bottom of the column tube. ***Note:*** *For plastic bed supports: Put some weight onto the bed support to keep it in place at the bottom of the column. Place the weight so that it will not harm the bed support. Use a new bed support as reference and the same weight as used with the used bed support.*
5	Open the bottom outlet and record the time it takes for the liquid level to move every 5 cm.
6	Repeat steps 3-5 using clean bed supports.

Step	Action
7	Compare the drainage times. If the drainage times are at least 10% longer for the used bed support compared with the new then: • For stainless steel bed support: Clean the clogged bed support. To clean the bottom bed support use the procedure described for cleaning the adapter bed support using an ultrasonic bath, see *Section 7.3.2 Stainless steel adapter bed support, on page 176*. For plastic bed support: Discard the clogged PE bed supports and replace with new ones. ***Note:*** *Make sure that the exact same tubings are used in the drainage test since this can contribute to the pressure drop and thereby the drainage rate.*

7.5 Perform a column leakage test

A leakage test shall be performed with liquid only in the column, i.e. no resin.

WARNING

A leakage test shall not be carried out with air present in the column. This is to avoid any potential explosion of the column tube caused by compression of the air.

Leakage test for the hydraulic chamber

Step	Action
1	• **For AxiChrom 50, 70, and 100:** Close the hydraulic chamber inlet with a stop plug. • **For AxiChrom 140 and 100:** Close the hydraulic chamber inlet with a TC end cap.
2	Fill the column with liquid.
3	Assemble the adapter and top plate assembly onto the column, see *Section 5.5 Fit the top plate and adapter, on page 73*.
4	Make sure that the top mobile phase inlet/outlet is open, and that the bottom mobile phase inlet/outlet is closed.
5	Insert a syringe into the vent valve and open the valve.
6	Pump liquid into the hydraulic chamber through the hydraulic chamber outlet. ***Note:*** *Observe that liquid shall be pumped in through the hydraulic chamber outlet when performing a leakage test for the hydraulic chamber. Otherwise, the correct pressure is not registered during measurement by the check valve at the hydraulic chamber inlet.*
7	Close the hydraulic chamber vent valve when only liquid escapes the valve.
8	The adapter moves down. Stop the pump when the adapter is at a suitable height. Water should be seen emerging from the open mobile phase inlet/outlet.
9	Close the open mobile phase inlet/outlet.

Step	Action
10	Pump liquid into the hydraulic chamber at a low liquid flow rate monitoring the pressure. Stop the pump when pressure is equal to maximum packing pressure, see *Section 9.1 Specifications, on page 252*. ***Note:*** *In order for the pressure to continue to be registered on an ÄKTA system when the pump has stopped, the flow must be set to zero (Flow = 0). If Pause or Stop are used to stop the flow, this will cause the registration of pressure to cease.*
11	Wait about 15 minutes until pressure is stable.
12	Monitor the pressure on the pressure gauge. The pressure drop should not exceed 0.1 bar g during 5 minutes. A recorder linked to a pressure controller gives more precise values during this procedure.
13	If the pressure drop exceeds this limit try to localize the source of the leakage. Begin with the valves and outlets for signs of leakage. If the leakage cannot be localized there, then the adapter sealing system is most likely the cause. Complete the test, empty the column, and take the necessary steps to rectify the suspected problem. Repeat the leakage test.

Leakage test for the process chamber

Step	Action
1	Connect suitable tubing and a pressure gauge to the bottom mobile phase.
2	Fill the column with liquid and assemble the adapter and top plate assembly onto the column, see *Section 5.5 Fit the top plate and adapter, on page 73*.
3	Make sure that one mobile phase inlet/outlet is open and the other closed.
4	Insert a syringe into the vent valve and open the valve.
5	Pump liquid into the hydraulic chamber through the hydraulic chamber inlet.
6	Close the hydraulic chamber vent valve when only liquid escapes the valve.
7	The adapter moves down. Stop the pump when the open inlet is primed.
8	Close the inlet/outlet and open the other inlet/outlet. Start the pump, and the adapter continues moving down. Stop at a suitable height and when the inlet is fully primed.
9	Assemble the mechanical locking equipment (see *Section 4.3 Mechanical locking of the adapter, on page 40*).

Step	Action
10	Pump liquid into the process chamber at a low liquid velocity while monitoring the pressure. Stop the pump when pressure is equal to maximum operating pressure (see *Section 9.1 Specifications, on page 252*). ***Note:*** *In order for the pressure to continue to be registered on an ÄKTA system when the pump has stopped, the flow must be set to zero (Flow = 0). If Pause or Stop are used to stop the flow, this will even cause the registration of pressure to cease.*
11	Wait about 15 minutes until the pressure is stable.
12	Monitor the pressure on the pressure gauge. The pressure drop should not exceed 0.1 bar g during 5 minutes. A recorder linked to a pressure controller gives more precise values during this procedure.
13	If the pressure drop exceeds this limit try to localize the source of the leakage. Begin with the valves and outlets for signs of leakage. If the leakage cannot be localized there, then the adapter sealing system is most likely the cause. Complete the test, empty the column, and take the necessary steps to correct the suspected error. Repeat the leakage test.

8 Troubleshooting

About this chapter

This chapter provides solutions to performance and technical problems that may arise. For each identified problem alternative actions are written as bullet points, and the first action should be tried before moving onto the next .

If the suggested actions in this guide do not solve the problem, or if the problem is not covered by this guide, contact your Cytiva representative for advice.

In this section

8.1 Performance

Problem	Comment	Action
Leading peak	Bed packed too densely.	• Repack the column with a lower Packing Factor.
Tailing peak	Bed not packed densely enough.	• Compress the bed further and retest before repacking the column with a higher Packing Factor.
Double peaks. The 'extra peak' is before the main peak (i.e., leading)	Cracks in the bed due to a too densely packed bed. The cracks are mainly vertical.	• Repack the column with a lower Packing Factor.
Double peaks. The 'extra peak' is after the main peak (i.e., tailing)	Cracks in the bed or a gap between the chromatography resin and adapter. The column may have been packed too loosely.	• Try to compress the bed slightly and retest. Otherwise, repack the column with a higher Packing Factor.
	Blocked bed support creates zones of different liquid velocities.	• To remove protein: Clean-in-place according to instructions. You may need to extend the time required. • To remove chromatography resin: For stainless steel bed support: Disassemble the column and remove the resin using ultrasound or compressed air, or replace the bed support. For plastic bed support: Discard the clogged PE bed supports.
Poor stability when repeating packing evaluation. Increased tailing.	Bed too loosely packed causing a gap between chromatography resin and adapter.	• Compress the bed further and retest before repacking the column with a higher Packing Factor.
Poor stability when repeating packing evaluations. Decreased tailing.	Column not properly equilibrated before packing evaluation.	• Re-equilibrate the column. Evaluate the packing again.

Problem	Comment	Action
Poor stability when repeating packing evaluation. Increased leading.	Bed packed too densely. Cracks present at the beginning get worse.	• Repack the column with a lower Packing Factor.
Poor stability when repeating packing evaluation. Decreased leading.	Column not properly equilibrated before packing evaluation.	• Re-equilibrate the column. Evaluate the packing again.
Poor stability when repeating packing evaluation. Decreasing number of plates.	Bed packed too densely or too loosely.	• Repack the column with a higher or lower Packing Factor.
Peak moves over several HETP (Height Equivalent to a Theoretical Plate) evaluations. Retention times change.	Extra volume in the system, e.g. new tubing (longer, shorter or different diameter) affects peak position and HETP.	• Make sure the equipment is the same or identical to your test routine or Standard operating procedure, SOP.
HETP values unrealistically high (number of theoretical plates too low).	Test molecule is excluded by the chromatography resin under the conditions used, e.g. NaCl for ion exchange chromatography, or chromatography resin in water as running liquid.	• Use appropriate test molecule and conditions, e.g. use acetone or 0.8 M NaCl as sample in 0.4 M NaCl.
HETP values unrealistically low (number of theoretical plates too high).	Test molecule interacts with the chromatography resin under the conditions used, e.g. acetone interacts with SOURCE resins.	• Use appropriate test molecule and conditions, e.g. use salt for SOURCE resins.
	The volume measurement failed to reset at start of sample elution, resulting in a very high retention volume.	• Adjust the chromatogram in UNICORN to correct the retention volume. See UNICORNmanual for further information.

Problem	Comment	Action
Unstable base line.	Leaking adapter bed support.	• Inspect the bed support for damage and replace if necessary.
	Leaking bottom bed support.	• Inspect the bed support for damage and replace if necessary.
High HETP value.	Liquid velocity too high or too low.	• Liquid velocity should be in the range 15-60 cm/h depending on particle size. The smaller the particle, the higher the velocity.
	Too large sample volume (gives a broad peak).	• Use a sample volume that is maximum 2% of the column volume.
	Too great a distance between the sample injection and column inlet, or between the column outlet and analyzing instrument.	• Shorten these distances (minimizes dilution).
	Large liquid volume in tubing, valves, connectors, etc.	• Minimize dilution by reducing the liquid volume. For example, if the inner diameters of the tubing, valves, connectors, etc. are wider than the column inlet and outlet, change them to the same diameter.
Poorly defined UV-peak.	Air not totally eliminated.	• Equilibrate more, e.g. pump wash with liquid (check that pump wash is included in the wizard selections) • Repack column
	Compression too high causing triggering of pressure alarm	• Check that slurry concentration is not too high. If so repack column.
A dip in the baseline during performance evaluation.	The air trap buffer was not completely replaced by mobile phase buffer before starting the Intelligent Packing method.	• Change the liquid in the air trap and retest.

Problem	Comment	Action
The retention volume observed during evaluation is higher than expected.	Leakage in the tubing between system and column or in the connection between the end cell and adapter rod tubing.	• Make sure that no connections are leaking. Change gaskets if necessary.
No elution peaks observed.	Too diluted sample solution or wrong sample solution.	• Make sure that the correct sample with the correct concentration is used.
	Siphoning flow during sample injection prevents the sample solution from being loaded onto the column.	• Increase the diameter of the outlet hose. • For ÄKTA pilot 600 and ÄKTAprocess: Lower the liquid level in the sample solution container and the mobile phase container respectively to a level below the outlet of the pump system.

8.2 Adapter

Problem	Comment	Action
Adapter still in column tube when top plate is removed.		• Reassemble the top plate onto the column and continue to move the adapter upwards by pumping liquid into the process chamber.
Adapter does not move upwards in the column despite applied pressure upflow in the process chamber.		• Undo adapter rod top and check if the tubing is easy to rotate. If so, then one of the ferrules inside the adapter is loose and does not seal properly. Insert a stop plug into the tube connection and push it down to assist sealing. Raise pressure under adapter to see if adapter moves. Follow the instructions under *Section 7.3.3 Adapter rod, adapter tubing, and top plate (stainless steel bed support), on page 185*.
Adapter does not move downwards.		• In the beginning of the packing, the adapter might be just above the glass incline. Give the adapter a very gentle push downwards approximately 0.5 to 1 mm. If this is not done immediately, the compression will be wrong. Then repack the column. • The scraper seal might be damaged. Change the scraper seal, see *Section 7.3.2 Stainless steel adapter bed support, on page 176*
Wrong bed height obtained.	The column was not correctly leveled	• Level the column using the adjustable feet and check with a spirit level. • Check selections made in the wizard, particularly for bed height, bed support, flow rate and Packing Factor. • Check the slurry concentration. • Make sure that the correct scale on the column has been used. There is one scale for stainless steel bed supports and one for plastic bed supports.

Problem	Comment	Action
	Wrong packing buffer	• Change to the packing buffer recommended in the UNICORN***Intelligent Packing*** wizard. Repack the column.
	Wrong amount of resin added to the column.	• Make sure that the correct slurry concentration is entered in the ***Intelligent Packing*** wizard and be careful to add the right volume of slurry.
	Wrong Packing Factor obtained.	• Check that defaults values were used during ***Intelligent Packing***. Performance of resin available in ***Intelligent Packing*** wizards has been verified by Cytiva in the range default Packing Factor ±0.02. Therefore it is known that a small deviation in Packing Factor does not result in bad performance. • Check that the container with hydraulic liquid is not empty. • Replace scraper sealing if damaged. • Check that the pump used for packing delivers the correct volume per time. • Unpack column and perform column leakage test (see *Section 7.5 Perform a column leakage test, on page 237*).
Difficulties to enter the adapter into the column.		• Place a centering tool into the top opening of the column to check the centering of the column tube. For correct position of the centering tool see *Reassemble the column tube assembly, on page 225*. • If the centering tool cannot be fitted into the column properly, follow the instructions under *Section 7.3.8 Column tube assembly, on page 224*.

Problem	Comment	Action
For 50-100 columns: **The adapter is partially unscrewed from the adapter rod.**	The adapter is not tight enough.	• Tighten the adapter to the adapter rod using a wrench and a hook wrench key (for the 100 column only: use another wrench instead of the hook wrench key), see *Section 7.3.3 Adapter rod, adapter tubing, and top plate (stainless steel bed support), on page 185*. The parts can loosen after using the column several times. Check that the adapter rod is tight before performing each packing procedure.
Large air bubbles under the adapter bed support.	The adapter was not thoroughly primed with buffer.	• Prime the adapter at a higher flow velocity. Spray 20% (v/v) ethanol on the bed support to lower the surface tension and thereby facilitate air removal.
	Air trapped between the scraper seal and the O-ring is pushed out due to compression of the O-ring when the adapter is lowered.	• If large quantities of air are trapped, restart the packing procedure. • Remount the scraper under water.

8.3 Top plate

Problem	Comment	Action
Leakage between top plate and top bayonet/top flange.	Resin on the bayonet fitting/top flange of the column tube	• Make sure that no resin remains on the bayonet fitting/top flange of the column. Rinse the edge with packing buffer. • Disassemble the adapter and top plate and change the O-ring [108] or carefully take off and rinse the O-ring and the O-ring groove. Reassemble.

8.4 Mechanical locking equipment

Problem	Comment	Action
Nuts at the mechanical locking are too tight to loosen by hand.		• Make sure that there is no air in the hydraulic chamber. Pump in liquid at a very low flow rate to pressurize the hydraulic chamber and move the adapter down by 1-2 mm. Loosen the nuts. Make sure not to over-pressurize the column or the bed.

8.5 Other

Problem	Comment	Action
Leakage from top mobile phase inlet/ outlet, bottom mobile phase inlet/outlet or hydraulic chamber inlet.	Damaged/missing O-ring. Damaged thread on tube connection.	• Replace damaged parts or add missing O-rings.
Small pieces of rubber at the surface of the resin slurry in the unpacked column.	Damaged O-ring inside the top plate for AxiChrom 140 and 200.	• Replace the damaged O-ring. • Avoid rotation of the top plate when it rests against the top flange. This is to minimize shear forces and stress in the O-ring.
Higher flow through the system than specified.	Siphoning flow.	• For ÄKTA pilot 600 and ÄKTAprocess: Make sure that the liquid levels in the containers are lower than the system outlet. This is to avoid siphoning flow.
Too high back-pressure.	Too thin tubing in the system.	• Use the recommended tubing diameters on ÄKTA systems connected AxiChrom. Tubing with smaller inner diameter might cause too high back-pressure at high flow rates.
Centering tool fastens.	Can occur during transportation	• Place the column in a cold-room over night.

9 Reference information

About this chapter

This chapter lists the technical specifications of AxiChrom 50 to 200 columns. The chapter also includes a chemical resistance guide, recycling information, regulatory information and ordering information, and Health and Safety Declaration form for service.

In this chapter

9.1 Specifications

In this section

9.1.1 Column dimensions

AxiChrom 50-200 columns are each available in two column tube lengths. Maximum bed height for the short column tube is 300 mm, and for the long column tube 500 mm. The columns are listed below:

Column	Short column tube	Long column tube
AxiChrom 50	AxiChrom 50/300	AxiChrom 50/500
AxiChrom 70	AxiChrom 70/300	AxiChrom 70/500
AxiChrom 100	AxiChrom 100/300	AxiChrom 100/500
AxiChrom 140	AxiChrom 140/300	AxiChrom 140/500
AxiChrom 200	AxiChrom 200/300	AxiChrom 200/500

The column type is printed on a label on the column and corresponds to the available column selections in the ***Intelligent Packing*** wizard of UNICORN.

Bed supports are available in stainless steel material and plastic in pore sizes 10 and 20 µm.

9.1.2 Primary specifications

AxiChrom 50-100

Primary column specifications and characteristics for the AxiChrom 50-100 columns are listed in the tables below.

	50 column	70 column	100 column
Inner diameter (mm)	50	70	100
Bed heights, ***Intelligent packing*** (cm) Short column tube Long column tube		10 to 30 30 to 50	
Bed heights, adapter stroke length[1] (cm) Short column tube Long column tube		5 to 35 30 to 60	
Bed volume (L) Short column tube Long column tube	0.20 to 0.59 0.59 to 0.98	0.39 to 1.15 1.15 to 1.92	0.79 to 2.36 2.36 to 3.93
Column cross sectional area (cm^2)	19.6	38.5	78.5
Max packing pressure (bar g)[2]	20	15	10
Max operating pressure (bar g)[3]	10	8	8
Operating temperature (°C)		2 to 30	
Operating pH range		1 to 14	
Stainless steel bed support pore sizes (µm)		10 or 20	
Plastic bed support pore sizes (µm)		10 or 20	
Column weight, empty (kg)[4] Short column tube Long column tube	6.5 7.5	10.0 11.5	16.5 19.5
Adapter and top plate weight (kg) Short column tube Long column tube	1.4 1.4	2.4 2.4	4.9 4.9
Foot/pivot stand weight (kg) AxiChrom foot Pivot stand: Short column tube Long column tube	1.0 7.0 7.5	N/A 7.0 7.5	

	50 column	70 column	100 column
Max. working height (m)[5] Short column tube Long column tube	 1.4 1.7	 1.65 1.8	
Footprint (mm x mm)	352 × 352 (foot) 350 × 360 (pivot stand)	350 × 360 (pivot stand)	

[1] Achievable bed heights outside ***Intelligent packing***.
[2] Refers to the maximum allowed pressure for the column, and specifically the maximum pressure in the hydraulic chamber during the packing procedure.
[3] Refers to the maximum allowed pressure over the bed during normal chromatographic operation.
[4] Empty column weight does not include the AxiChrom foot or pivot stand.
[5] Refers to the height needed to insert or remove the adapter completely when working with the AxiChrom column foot for the 50 column and pivot stand for the 70 and 100 columns.

AxiChrom 140-200

Primary column specifications and characteristics for the AxiChrom 140-200 columns are listed in the tables below.

	140 column	200 column
Inner diameter (mm)	140	200
Bed heights, ***Intelligent packing*** (cm) Short column tube Long column tube	10 to 30 30 to 50	
Bed heights, adapter stroke length[1] (cm) Short column tube Long column tube	5 to 35 30 to 60	
Bed volume (l) Short column tube Long column tube	1.54 to 4.62 4.62 to 7.70	3.14 to 9.42 9.42 to 15.71
Column cross sectional area (cm^2)	153.9	314.2
Max packing pressure (bar g)[2]	8	6
Max operating pressure (bar g)[3]	6	5
Operating temperature (°C)	2 to 30	
Operating pH range	1 to 14	
Stainless steel bed support pore sizes (µm)	10 or 20	
Plastic bed support pore sizes (µm)	10 or 20	
Column weight, empty (kg)[4] Short column tube Long column tube	28.5 31.5	41.5 45.5
Adapter and top plate weight (kg) Short column tube Long column tube	7 7	12.5 12.5
Pivot stand weight (kg) Short column tube Long column tube	23.5 25.0	
Max. working height (m)[5] Short column tube Long column tube	2.0 2.1	
Footprint (mm × mm)	524 × 567 (pivot stand)	

1 Achievable bed heights outside ***Intelligent packing***.
2 Refers to the maximum allowed pressure for the column, and specifically the maximum pressure in the hydraulic chamber during the packing procedure.
3 Refers to the maximum allowed pressure over the bed during normal chromatographic operation.
4 Empty column weight does not include the AxiChrom pivot stand.
5 Refers to the height needed to insert or remove the adapter completely when working with the pivot stand for the columns.

9.2 Materials

The materials used to manufacture AxiChrom columns have been chosen for their biological and chemical compatibility with the solvents used during operation and cleaning-in-place (CIP) procedures. The columns have also been designed to comply with the varying hygienic requirements at the different stages of development and production. Polymer materials in AxiChrom columns in contact with process liquids have been selected for their biological compatibility according to the United States Pharmacopeia (USP) Biological Reactivity Tests, *In vivo* and conform to USP class VI requirements, compliance with Code of Federal Regulations (CFR), Food and Drug Administration, Title 21, Part 177 and being animal free or complies with the conditions in the CPMP Note for Guidance (EMA/410/01 Rev.2).

The polymer materials conform to the requirements of at least USP class VI classification and to FDA CFR 177. All material in contact with process liquids are also of non-animal origin or have been produced under manufacturing conditions complying with EMA/410/01. See Appendices A, B and C for lists of column components and materials. For major components and their materials of manufacture, see tables below.

Note: *For components made of Stainless steel EN1.4404, stainless steel EN 1.4432 (316L) and 1.4435 (316L) may also have been used. All these are to standards EN 10028-7 and EN 10272. For components made of Stainless steel EN1.4401, stainless steel EN 1.4436 (316L) may also have been used.*

Note: *For plastic parts there can be a slight color variation due to UV exposure. This is completely normal and does not affect column performance.*

In this section

9.2.1 Materials for 50-100 columns

The materials for the major components of AxiChrom 50-100 columns are listed in the table below.

Component	Material	In contact with process stream
Column tube	Glass Borosilicate 3.3 (complies with EU standard EN 1595)	Yes
Top plate	Stainless steel EN 1.4462	No
Bottom plate (100, 140, and 200 column)	Stainless steel EN 1.4404 (316L)	No
Seals	EPDM, FKM/FPM and UHMWPE	Yes
Tubing	PVDF	Yes
AxiChrom foot	PS	No
AxiChrom pivot stand	Stainless steel EN1.4401 (316) and POM-C	No
Stainless steel bed support dependent parts		
Bottom plate (50 and 70 columns)	Stainless steel EN1.4404 (316L), EN1.4462	Yes
Bed support ring	PEEK	Yes
Bed support	Stainless steel EN1.4404 (316L)	Yes
Adapter (50 column)	Stainless steel EN 1.4571 (316Ti), EN1.4462	Yes
Adapter (70 column)	Stainless steel EN1.4404 (316L), EN1.4462	Yes
Adapter (100 column)	Stainless steel EN1.4404 (316L), EN1.4462	No
End cell (100 column)	PP	Yes
Plastic bed support dependent parts		
Seals	EPDM, FKM/FPM and UHMWPE	Yes
Adapter (50 and 70 columns)	Stainless steel EN1.4404 (316L), EN1.4462	No
Bottom plate (50 and 70 columns)	Stainless steel EN1.4404 (316L), EN1.4462	No
Support net (50 and 70 columns)	PP	Yes
Bed support	PE	Yes
Snap ring	PEEK reinforced PTFE	Yes

Component	Material	In contact with process stream
Distributor (50 and 70 columns)	PEEK	Yes
Distributor (100 column)	PP	Yes

9.2.2 Materials for 140-200 columns

The materials for the major components of AxiChrom 140-200 columns are listed in the table below.

Component	Material	In contact with process stream
Column tube	Glass Borosilicate 3.3 (complies with EU standard EN 1595)	Yes
Top plate	Stainless steel EN1.4404 (316L), EN 1.4462	No
Bottom plate	Stainless steel EN 1.4401 (316)	No
Seals	EPDM and UHMWPE	Yes
Adapter	Stainless steel EN1.4404 (316L), EN 1.4462	No
Adapter tube	PP	Yes
AxiChrom pivot stand	Stainless steel EN1.4401 (316)	No
Stainless steel bed support components		
Bed support ring	PEEK	Yes
Bed support	Stainless steel EN1.4404 (316L)	Yes
End cell	PP	Yes
Plastic bed support components		
Snap ring	PEEK reinforced PTFE	Yes
Bed support	PE	Yes
Distributor	PP	Yes

9.3 Chemical resistance

The table below lists the chemical resistance of the columns to various chemicals. The concentrations listed should not be exceeded during an operating cycle.

In general, avoid using the following chemicals in AxiChrom columns:

- Extreme oxidizers
- Fluorine and halogenated compounds
- Chlorinated solvents (such as methylene chloride)
- Esters
- Aromatic hydrocarbons (such as toluene)
- Alcohols (e.g. ethanol) above 20% (v/v)
- Chloride solutions in combination with pH below 4. Always wash the column with at least two column volumes of pH-neutral solution (water) between the use of salt and low pH liquid

Note: *This information has been collected from several published sources, not from individual tests on column components. It should be used only as a guide. The effects of a chemical will generally be more severe at higher temperatures. Note also that the combined effects of agents have not been taken into account in this table.*

NOTICE

Low pH solutions containing chlorides can cause corrosion in stainless steel. Rinse thoroughly with clean water after each use with such solutions. Inspect the column regularly for signs of corrosive attacks, which will cause column damage if untreated.

Table 9.1: General guideline to chemical resistance for AxiChrom 50 to 200 columns.

Chemical [1]	Concentration[2]	Time/cycle restrictions	Comments	CAS No.[3]
Acetic acid	25%	3 h	CIP	64-19-7
Acetone	2%	1 h	Function test	67-64-1
Ammonium sulfate	2 M[4]	5 h	Adsorption	7783-20-2
Benzyl alcohol	2%	12 months	Storage	100-51-6
Ethanol	20%	12 months max. 0.5 bar	Storage	64-17-5
Ethanol	70%[5]	3 h	CIP	64-17-5
Ethanol/acetic acid	20%/10%	3 h	CIP	64-17-5/ 64-19-7
Guanidine hydro-chloride	6 M[6]	5 h	CIP	50-01-1
Hydrochloric acid	0.1 M (pH=1)[7]	1 h	CIP	7647-01-0
Isopropanol	30%	1h	CIP	67-63-0
Peracetic acid	100 mM	24 h	CIP	79-21-0
Phosphoric acid	5%	8 h	Passivation of SS bed supports	7664-38-2
Sodium chloride	0 to 3 M[5,7,8]	3 h	Purification, CIP	7647-14-5
Sodium hydroxide[9]	1 M (pH 14)	24 h	CIP	1310-73-2
Sodium hydroxide / ethanol	1 M / 20%	3 h	CIP	1310-73-2/ 64-17-5
Sodium sulfate	1 M[4]	3 h	Adsorption	7757-82-6
Urea	8 M[4]	5 h	Purification, CIP	57-13-6
Commonly used aqueous buffers for chromatographic use	10 to 250 mM pH 3 to 10	24 h	Equilibration, adsorption, elution	

1 If nothing else stated, the recommended temperature for usage is 2°C to 30°C for all chemicals listed in this table.
2 When a concentration is given as a percentage, this is v/v.
3 CAS No. is the registration number assigned by the Chemical Abstract Services (CAS), American Chemical Safety. Refer to Material safety data Sheet (MSDS) for more information.
4 pH in these solutions depends on the pH of the liquid, which can vary between pH 3 to 13.
5 Glass and stainless steel columns.
6 Not for use with columns containing wetted components of stainless steel.
7 pH below 4 for stainless steel is not recommended.
8 For columns containing wetted stainless steel components max. 1.0 M NaCl is recommended.
9 Room temperature to 30°C

NOTICE

Make sure to rinse tubing and system after using Sodium hydroxide to avoid damage of the tubing.

Chloride containing liquids

Depending on configuration, AxiChrom columns are equipped with wetted components of stainless steel and must therefore be appropriately maintained when exposed to chloride ions during chromatographic processes. If a process incorporates the use of chloride ion solutions it is essential that the column is thoroughly rinsed to remove any residual chloride ions. It is recommended that a water rinse of at least five column volumes is used. Water is the preferred rinse solution due to the solubility properties of chloride ions in water versus other possible rinsing solutions like ethanol solutions. Both the outside and the inside of the column should be thoroughly rinsed with purified water. Residual chloride ions can be corrosive to stainless steel over time. Therefore it is recommended to remove any buffer containing chloride ions that comes into contact with the top bayonet during pouring of slurry into the column by rinsing with water. Also rinse the upper surface of the adapter after placing it into the slurry. Columns should be stored with solutions free from chloride ions.

It is also recommended to empty the hydraulic chamber before storage of a packed column. Use a mechanical locking equipment to keep the axial compression (see *Section 4.3 Mechanical locking of the adapter, on page 40*).

9.4 Recycling information

Introduction

This section contains information about the decommissioning of the product.

CAUTION

Always use appropriate personal protective equipment when decommissioning the equipment.

Decontamination

The product must be decontaminated before decommissioning. All local regulations must be followed with regard to scrapping of the equipment.

Disposal of the product

When taking the product out of service, the column should be emptied, cleaned and sterilized. The different materials must be separated and recycled according to national and local environmental regulations.

9.5 Regulatory information

Introduction

This section lists the regulations and standards that apply to the product.

In this section

9.5.1 Contact information

Contact information for support

To find local contact information for support and sending troubleshooting reports, visit *cytiva.com/contact*.

Manufacturing information

The table below summarizes the required manufacturing information.

Requirement	Information
Name and address of manufacturer	Cytiva Sweden AB Björkgatan 30 SE 751 84 Uppsala Sweden
Telephone number of manufacturer	+ 46 771 400 600

9.5.2 European Union and European Economic Area

Introduction

This section describes regulatory information for the European Union and European Economic Area that applies to the equipment.

Conformity with EU Directives

See the EU Declaration of Conformity for the directives and regulations that apply for the CE marking.

If not included with the product, a copy of the EU Declaration of Conformity is available on request.

CE marking

The CE marking and the corresponding EU Declaration of Conformity is valid for the instrument when it is:

- used according to the *Operating Instructions* or user manuals, and
- used in the same state as it was delivered, except for alterations described in the *Operating Instructions* or user manuals.

9.5.3 Eurasian Economic Union Евразийский экономический союз

This section describes the information that applies to the product in the Eurasian Economic Union (the Russian Federation, the Republic of Armenia, the Republic of Belarus, the Republic of Kazakhstan, and the Kyrgyz Republic).

Introduction

This section provides information in accordance with the requirements of the Technical Regulations of the Customs Union and (or) the Eurasian Economic Union.

Введение

В данном разделе приведена информация согласно требованиям Технических регламентов Таможенного союза и (или) Евразийского экономического союза.

Manufacturer and importer information

The following table provides summary information about the manufacturer and importer, in accordance with the requirements of the Technical Regulations of the Customs Union and (or) the Eurasian Economic Union.

Requirement	Information
Name, address and telephone number of manufacturer	See *Manufacturing information*
Importer and/or company for obtaining information about importer	Cytiva RUS LLC 109004, Moscow internal city area Tagansky municipal district Stanislavsky str., 21, building 3, premises I, office 57 Russian Federation Telephone: +7 499 609 15 50 E-mail: *rucis@cytiva.com*

Информация о производителе и импортере

В следующей таблице приводится сводная информация о производителе и импортере, согласно требованиям Технических регламентов Таможенного союза и (или) Евразийского экономического союза.

Требование	Информация
Наименование, адрес и номер телефона производителя	См. *Информацию об изготовлении*
Импортер и/или лицо для получения информации об импортере	ООО "Цитива РУС" 109004, город Москва вн.тер.г. муниципальный округ Таганский улица Станиславского, дом 21, строение 3, помещение I, комната 57 Российская Федерация Телефон: +7 499 609 15 50 Адрес электронной почты: *rucis@cytiva.com*

Description of symbol on the system label
Описание обозначения на этикетке системы

EAC

This Eurasian compliance mark indicates that the product is approved for use on the markets of the Member States of the Customs Union of the Eurasian Economic Union

Данный знак о Евразийском соответствии указывает, что изделие одобрено для использования на рынках государств-членов Таможенного союза Евразийского экономического союза

9.6 Service and training

Please contact your Cytiva representative regarding service and training for AxiChrom columns.

9.7 Ordering information

A Product documentation spare parts list is found in binder. Also visit for the latest information about accessories and spare parts.

It is recommended to keep the following spare parts on-site:

If bed support type is...	Then keep the following spare parts on-site...
Stainless steel	A complete set of O-rings, bed supports, and scraper seals.
Plastic	A complete set of snap rings, bed supports, O-rings and scraper seals.

9.8 Health and Safety Declaration Form

On site service

cytiva

On Site Service Health & Safety Declaration Form

Service Ticket #:	

To make the mutual protection and safety of Cytiva service personnel and our customers, all equipment and work areas must be clean and free of any hazardous contaminants before a Service Engineer starts a repair. To avoid delays in the servicing of your equipment, complete this checklist and present it to the Service Engineer upon arrival. Equipment and/or work areas not sufficiently cleaned, accessible and safe for an engineer may lead to delays in servicing the equipment and could be subject to additional charges.

Yes	No	Review the actions below and answer "Yes" or "No". Provide explanation for any "No" answers in box below.
○	○	**Instrument has been cleaned of hazardous substances**. Rinse tubing or piping, wipe down scanner surfaces, or otherwise make sure removal of any dangerous residue. Make sure the area around the instrument is clean. If radioactivity has been used, perform a wipe test or other suitable survey.
○	○	**Adequate space and clearance is provided to allow safe access** for instrument service, repair or installation. In some cases this may require customer to move equipment from normal operating location prior to Cytiva arrival.
○	○	**Consumables, such as columns or gels, have been removed or isolated from the instrument and from any area that may impede access to the instrument.**
○	○	**All buffer / waste vessels are labeled. Excess containers have been removed from the area to provide access.**
Provide explanation for any "No" answers here:		

Equipment type / Product No:		**Serial No:**	

I hereby confirm that the equipment specified above has been cleaned to remove any hazardous substances and that the area has been made safe and accessible.

Name:		**Company or institution:**	
Position or job title:		**Date (YYYY/MM/DD):**	
Signed:			

For local office contact information, visit cytiva.com/contact.
28980026 AD 04/2020

Product return or servicing

cytiva

Health & Safety Declaration Form for Product Return or Servicing

Return authorization number:		*and/or* **Service Ticket/Request:**	

To make sure the mutual protection and safety of Cytiva personnel, our customers, transportation personnel and our environment, all equipment must be clean and free of any hazardous contaminants before shipping to Cytiva. To avoid delays in the processing of your equipment, complete this checklist and include it with your return.

1. Note that items will NOT be accepted for servicing or return without this form
2. Equipment which is not sufficiently cleaned prior to return to Cytiva may lead to delays in servicing the equipment and could be subject to additional charges
3. Visible contamination will be assumed hazardous and additional cleaning and decontamination charges will be applied

Yes	No	Specify if the equipment has been in contact with any of the following:	
○	○	Radioactivity (specify)	
○	○	Infectious or hazardous biological substances (specify)	
○	○	Other Hazardous Chemicals (specify)	

Equipment must be decontaminated prior to service / return. Provide a telephone number where Cytiva can contact you for additional information concerning the system / equipment.

Telephone No:		
Liquid and/or gas in equipment is:	☐	**Water**
	☐	**Ethanol**
	☐	**None, empty**
	☐	**Argon, Helium, Nitrogen**
	☐	**Liquid Nitrogen**
	Other, specify	

Equipment type / Product No:		**Serial No:**	

I hereby confirm that the equipment specified above has been cleaned to remove any hazardous substances and that the area has been made safe and accessible.

Name:		**Company or institution:**	
Position or job title:		**Date (YYYY/MM/DD)**	
Signed:			

For local office contact information, visit cytiva.com/contact.
28980027 AD 04/2020

To receive a return authorization number or service number, call local technical support or customer service.

Appendix A

Parts list and diagrams AxiChrom 50 column

Spare parts list AxiChrom 50

Pos no.	Description
101 a,b	Stop plug 5/16", PKG/5
102	O-ring 15.45x2.8
104	O-ring 10.3x2.4
105	Adapter rod top 50
106	Set screw M3x6
107	Purge valve polished/ Vent valve
108	O-ring 48x2.5
109	Tube connection 5/16 id 1.7 Fem/fem
111	O-ring 11.1x1.6
114 a,b	O-ring 54x2
115 a,b	Tube support 50
116	Check Valve holder
117 a,b	O-ring 3.6x1.6
118	Check Valve
119	Washer 6.4x12
123-1	AxiChrom foot 50
123-2	Hex. socket round head screw M6x30
126	O-ring 3x1
131 a,b	Stop plug 5/16" USPVI
201	Glass tube 50/300, Short
201	Glass tube 50/500, Long

Pos no.	Description
301	Bed support 50 top
302	Bed support 50 Bottom
401	Screw M3x8 SS
401	Screw M3x12.5 (plastic bed support)
402	Distributor 50 top
403	Screw M3x16 SS
404	Distributor 50 bottom
405-1,2,3	Adapter tube id 1.7 L=637
409	O-ring 28.3x1.78
410	O-ring 28.3x1.78
411	O-ring 34.646x1.78
412	Washer 3.2x9x0.8
413	O-ring 2.5x1.3
416	O-ring 2.5x1.3
421 a,b	Snap ring 50
422 a,b	Support net
501	Adapter 50
502	Bottom plate 50
602 a,b	O-ring 3x1
604	O-ring 44.12x2.62
605	Scraper 50
606	O-ring 44.2x3 FPM
801	Screw M4x16 SS
802	Adapter rod 50
803	Top plate 50
805	Bottom flange 50
806	Hex. nut M6
901	Tie bar M6 300, Short

Pos no.	Description
901	Tie bar M6 500, Long
804	Top bayonet 50
A	Adapter and top plate assembly
B	Column tube assembly
C	Bottom plate assembly
D	Adapter assembly with tube
E	Adapter assembly
-	Bayonet tool
-	Hook wrench key
-	Mounting aid for o-rings
-	Centering tool 50

Diagrams

Symbol	Meaning
No.	Number corresponds to Pos. no. in Material conformity and Spare part list.
	Illustrating parts in contact with process liquids and/or that are pressure retaining.

Column and foot

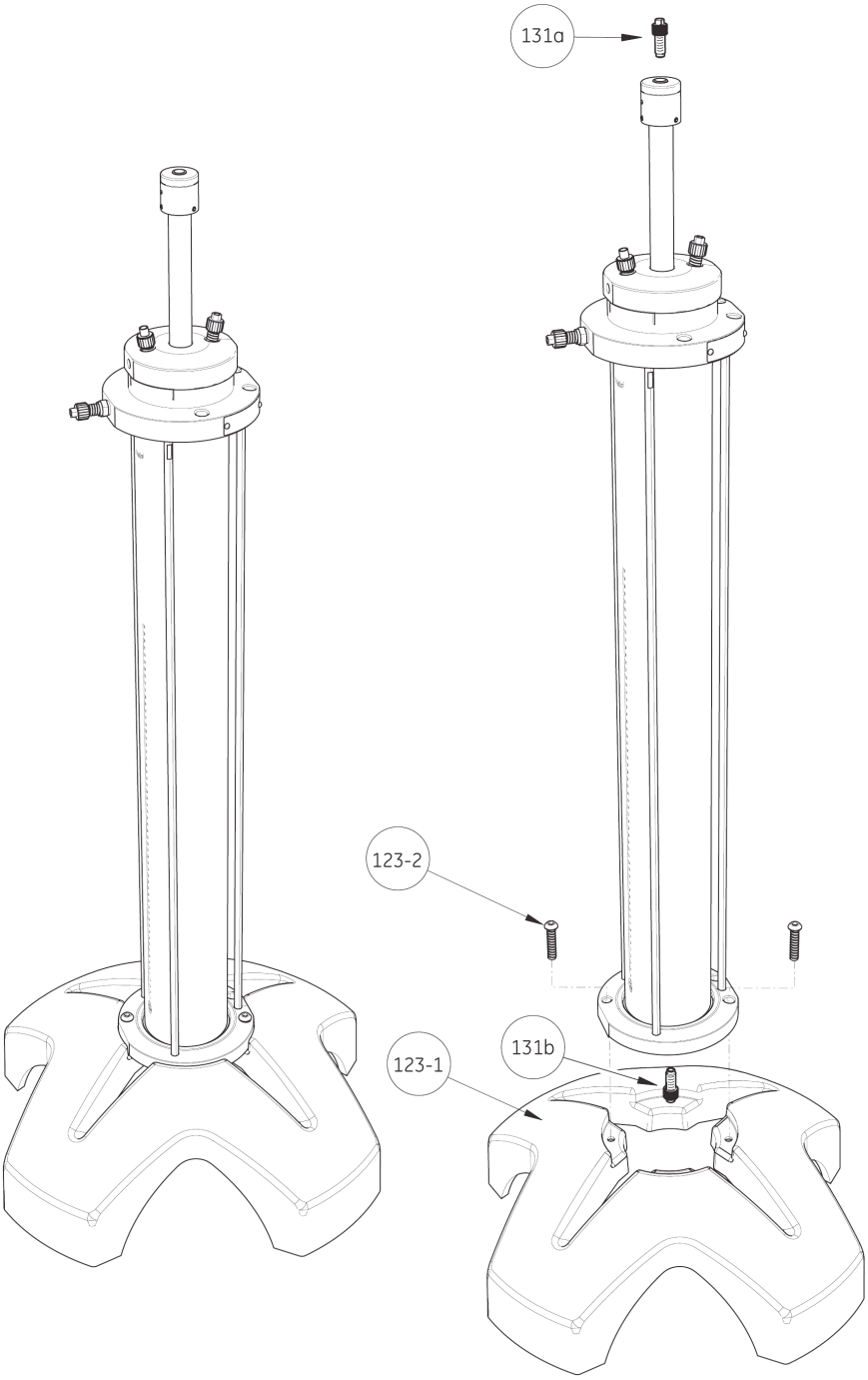

Column tube, adapter and bottom plate

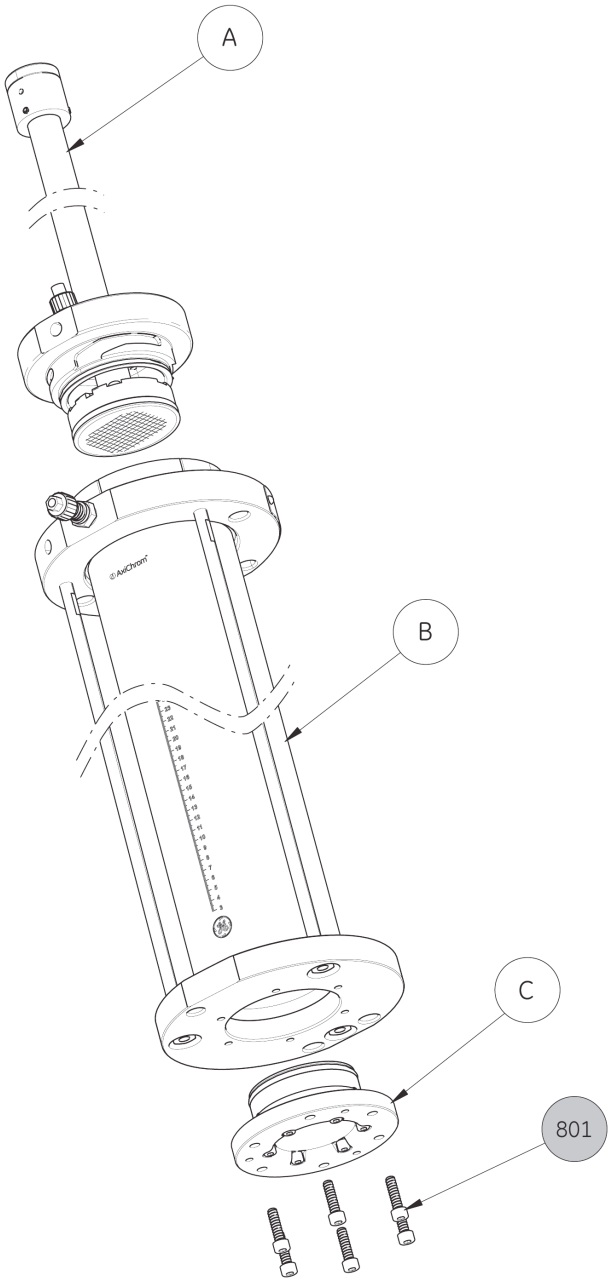

Adapter assembly (stainless steel bed support)

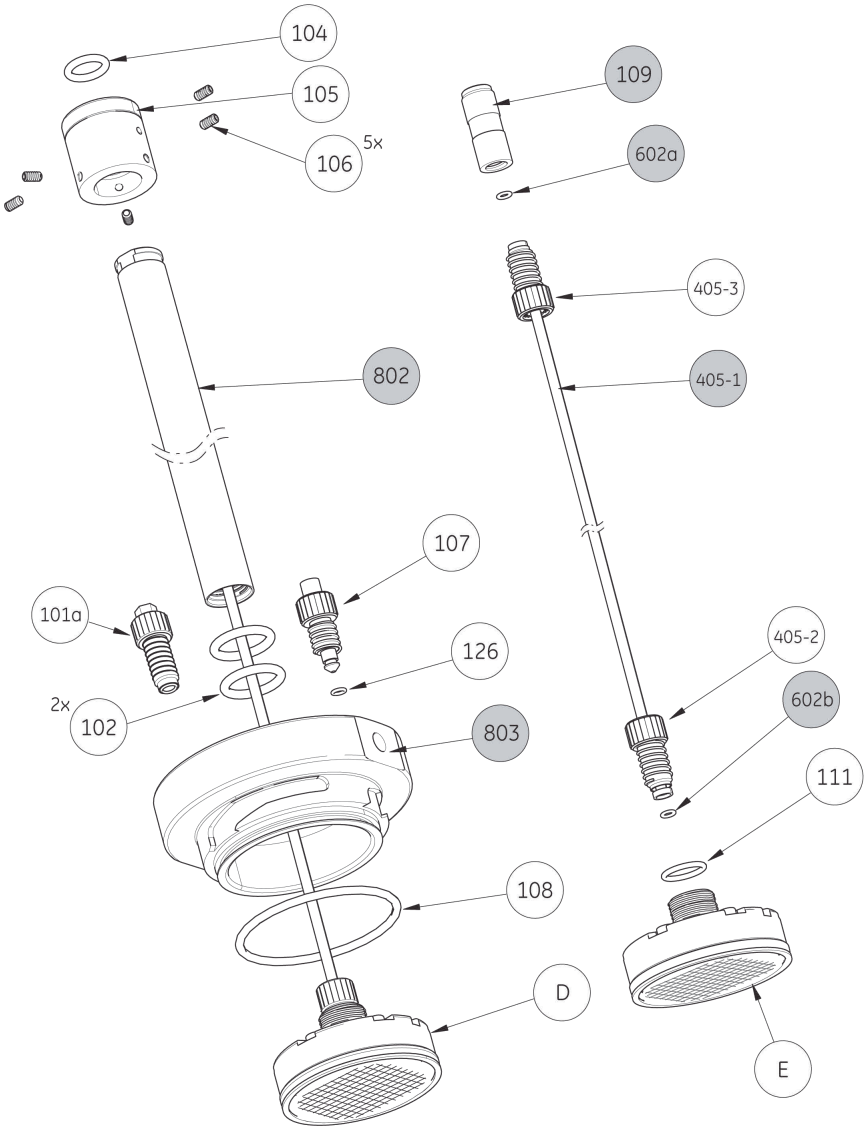

Adapter assembly (plastic bed support)

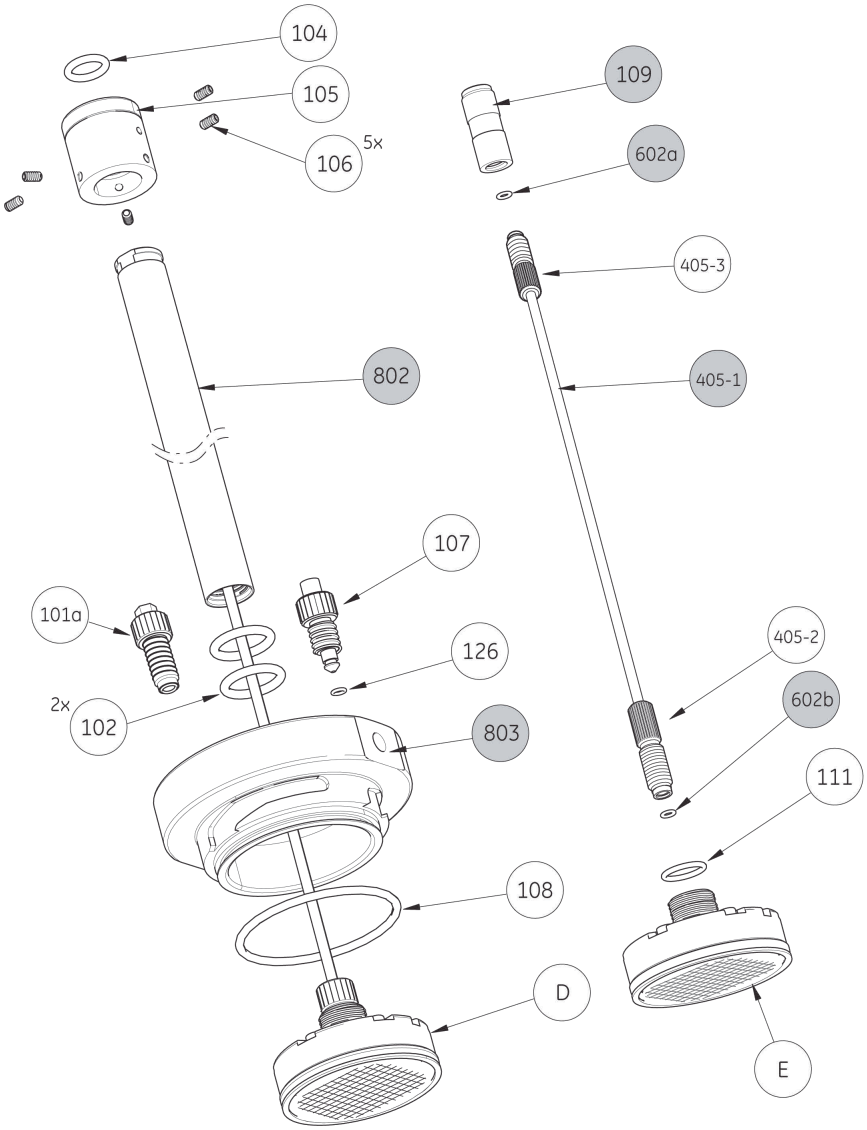

Adapter plate assembly and bottom plate assembly (stainless steel bed support)

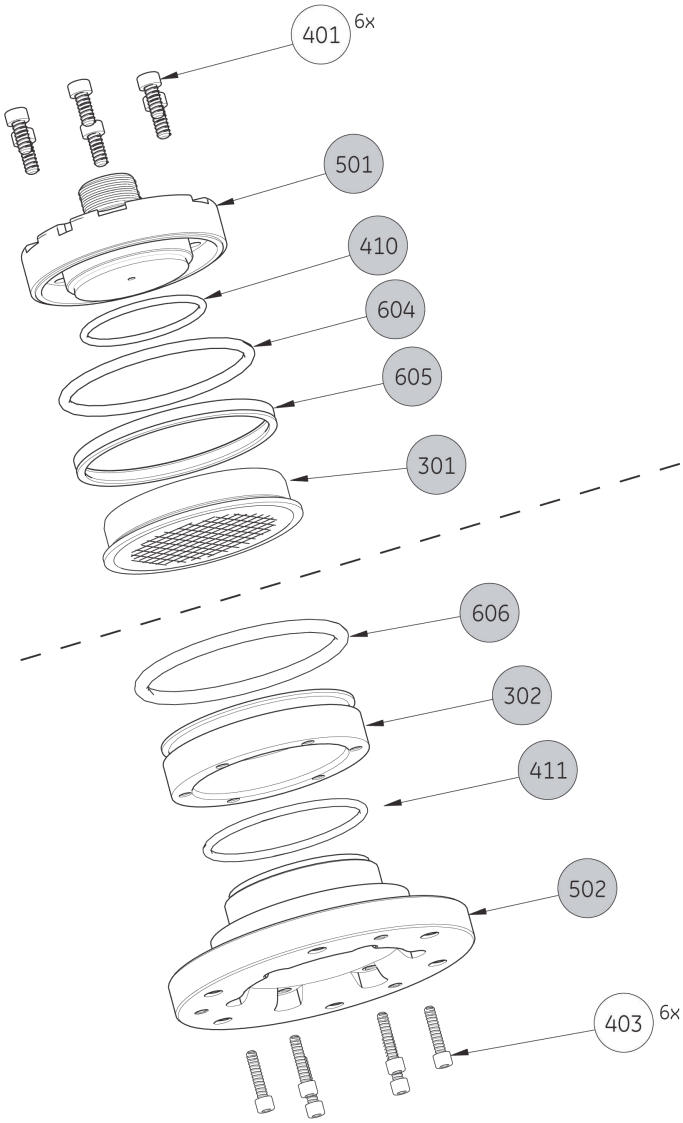

Adapter plate assembly and bottom plate assembly (plastic bed support)

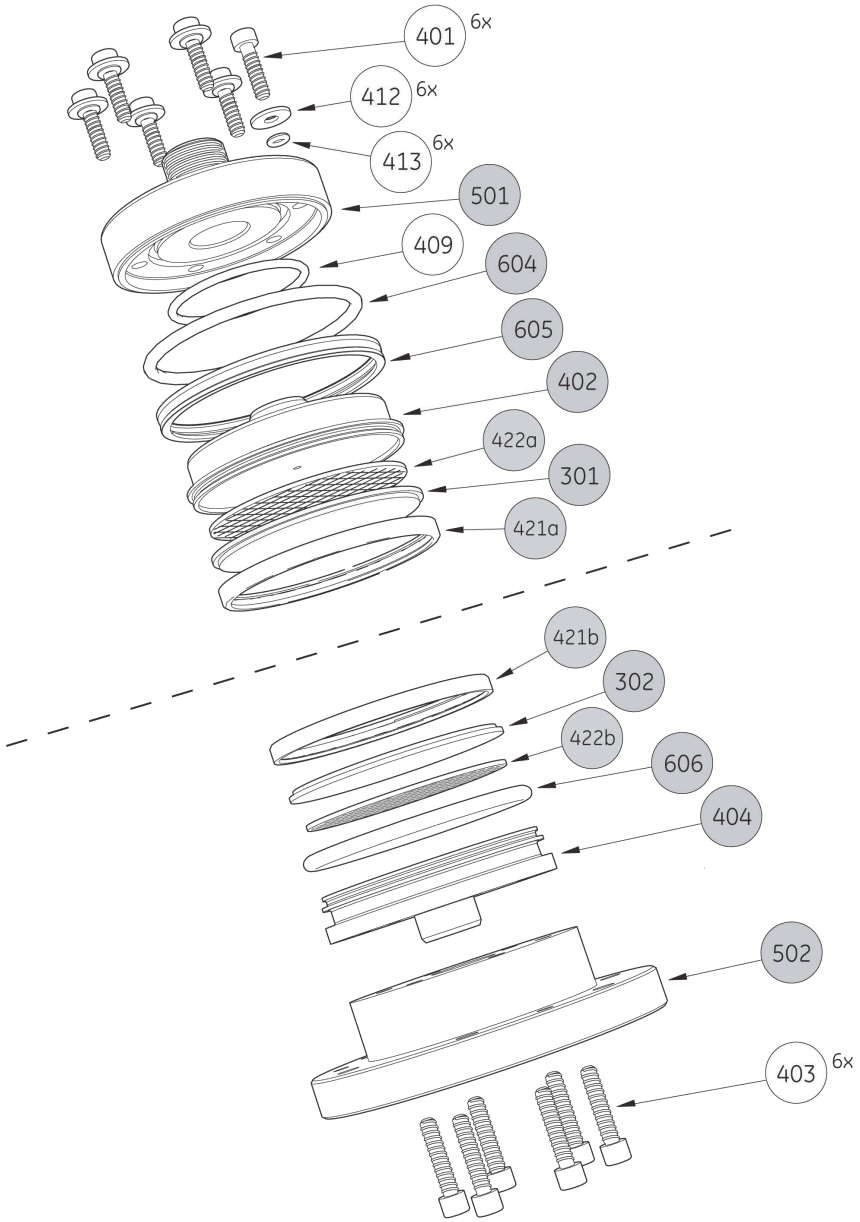

Column tube assembly

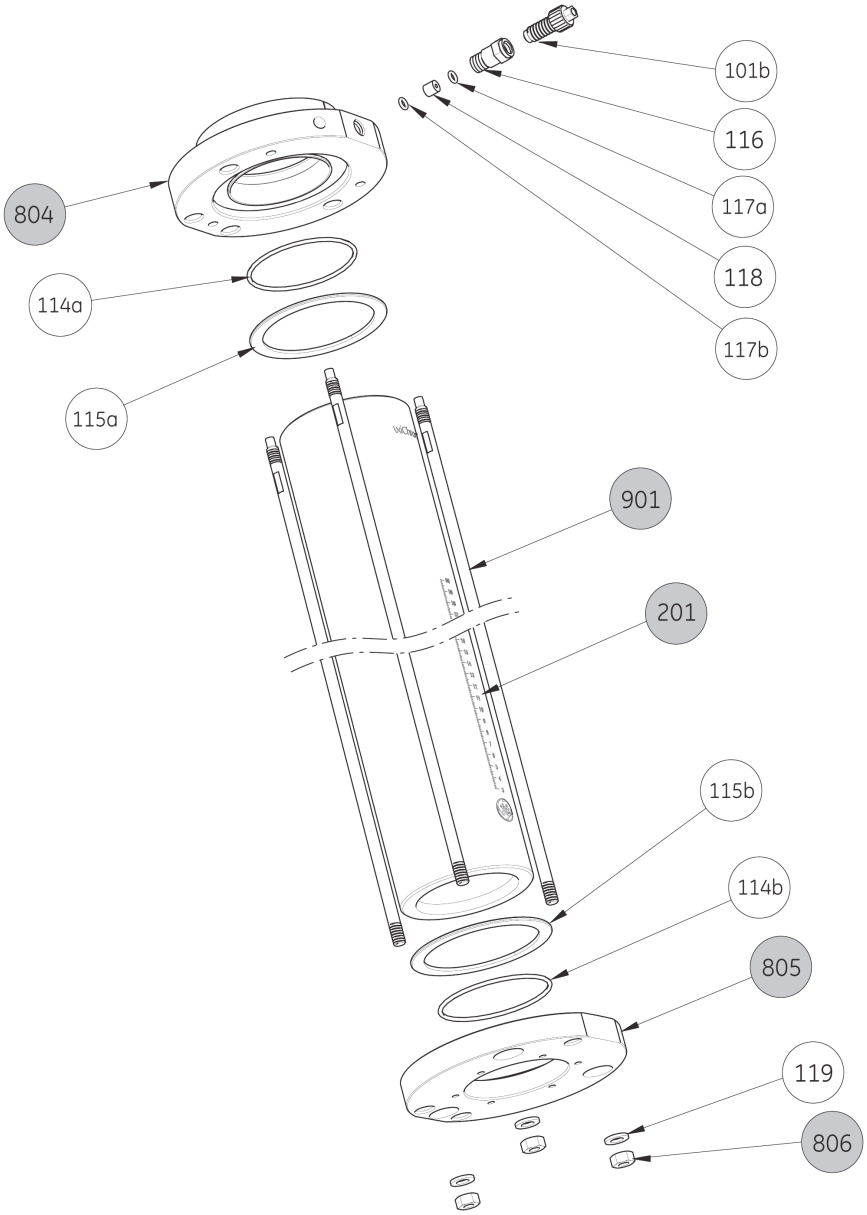

Appendix B

Parts list and diagrams AxiChrom 70 column

Spare parts list AxiChrom 70

Pos no.	Description
101 a,b	Stop plug 5/16", PKG/5
102	O-ring 19.5x3
104	O-ring 10.3x2.4
105	Adapter rod top 70
106	Set screw M3x6
107	Purge valve polished / Vent valve
108	O-ring 65x3
109	Tube connection 5/16 id 2.9 Fem/fem
111	O-ring 14X1.5
114 a,b	O-ring 72x2
115 a,b	Tube support 70
116	Check Valve holder
117 a,b	O-ring 3.6x1.6
118	Check Valve
119	Washer 6.4x12
126	O-ring 3x1
131 a,b	Stop plug 5/16" USPVI
201	Glass tube 70/300
201	Glass tube 70/500
301	Bed support 70 top
302	Bed support 70 bottom

Pos no.	Description
401	Screw M3x8 SS
401	Screw M3x12.5 (plastic bed support)
402	Distributor 70 top
403	Screw M3x16 SS
404	Distributor 70 bottom
405-1,2,3	Adapter tube id 2.9 L=636
409	O-ring 28.3x1.78
410	O-ring 47x2
411	O-ring 54x2
412	Washer 3.2x9.0.8
413	O-ring 2.5x1.3
421 a,b	Snap ring 70
422 a,b	Support net
501	Adapter 70
502	Bottom plate 70
602 a,b	O-ring 3x1
604	O-ring 63.2x2.8 EPDM
605	Scraper 70
606	O-ring 63.09x3.53
701-1	Pivot stand 50/70/100-300
701-1	Pivot stand 50/70/100-500
701-2	Screw M6x12
801	Screw M4x16 SS
802	Adapter rod 70
803	Top plate 70
804	Top bayonet 70
805	Bottom flange 70
806	Hex. nut M6

Pos no.	Description
901	Tie bar M6 300
901	Tie bar M6 500
A	Adapter and top plate assembly
B	Column tube assembly
C	Bottom plate assembly
D	Adapter assembly with tube
E	Adapter assembly
-	Bayonet tool
-	Hook wrench key
-	Mounting aid for o-rings
-	Centering tool 70

Diagrams

Symbol	Meaning
No.	Number corresponds to Pos. no. in Material conformity and Spare part list.
	Illustrating parts in contact with process liquids and/or that are pressure retaining.

Column and pivot stand

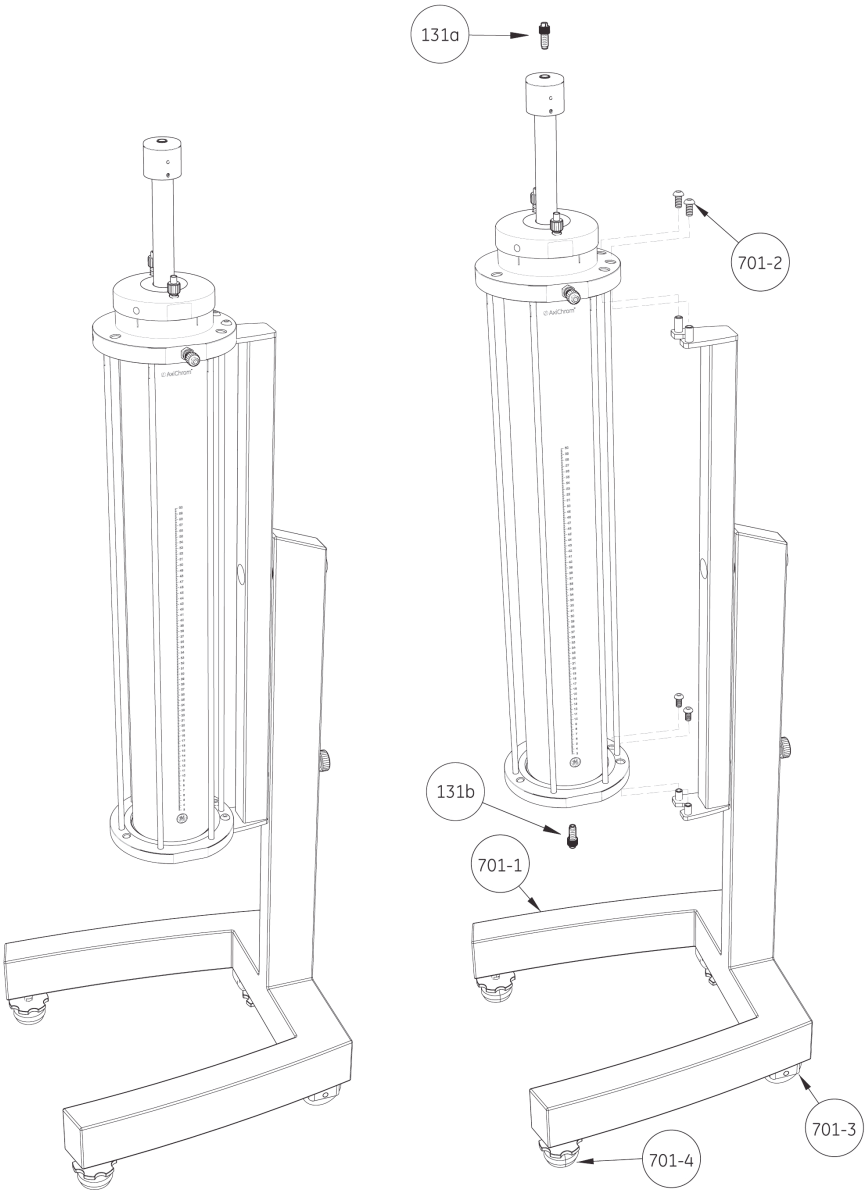

Column tube, adapter and bottom plate

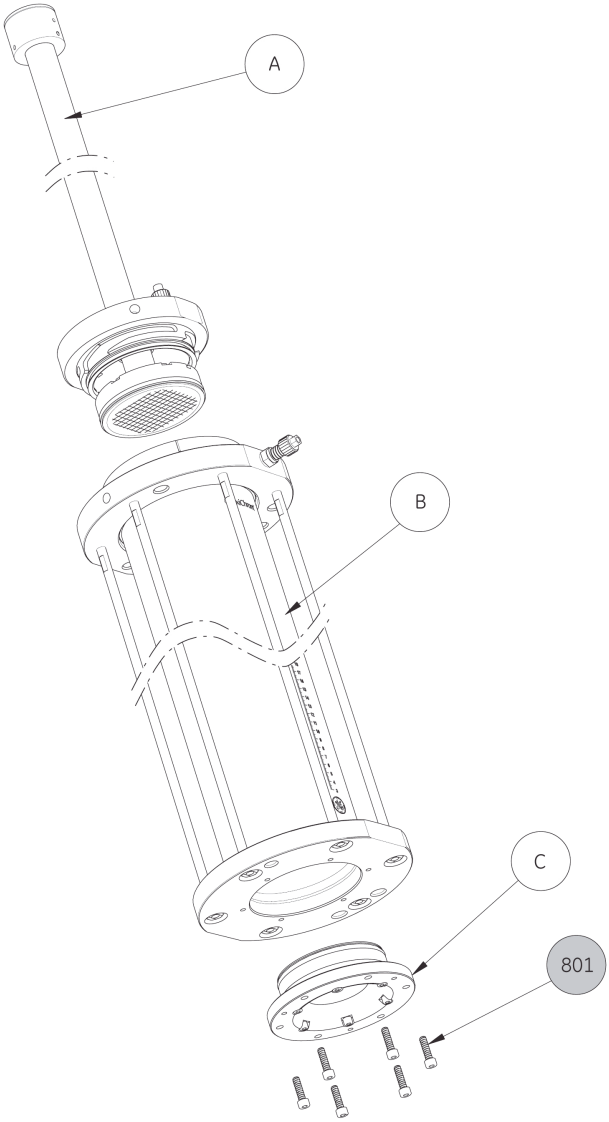

Adapter assembly (stainless steel bed support)

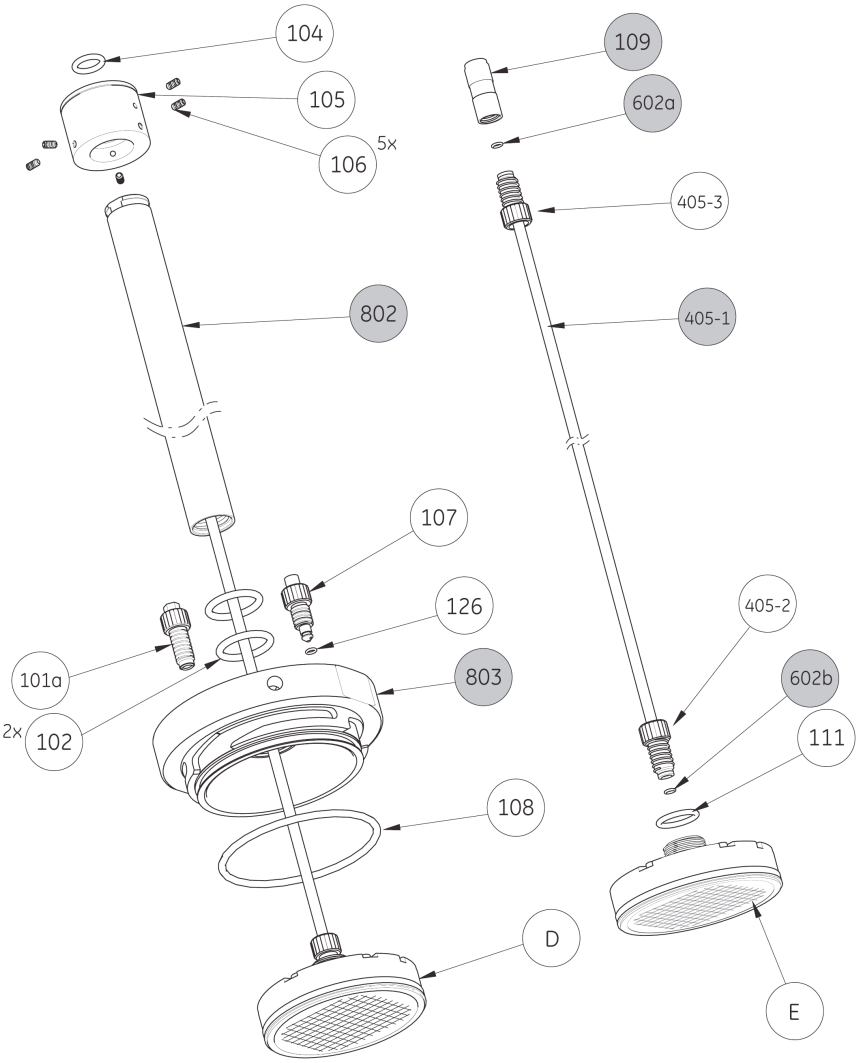

Adapter assembly (plastic bed support)

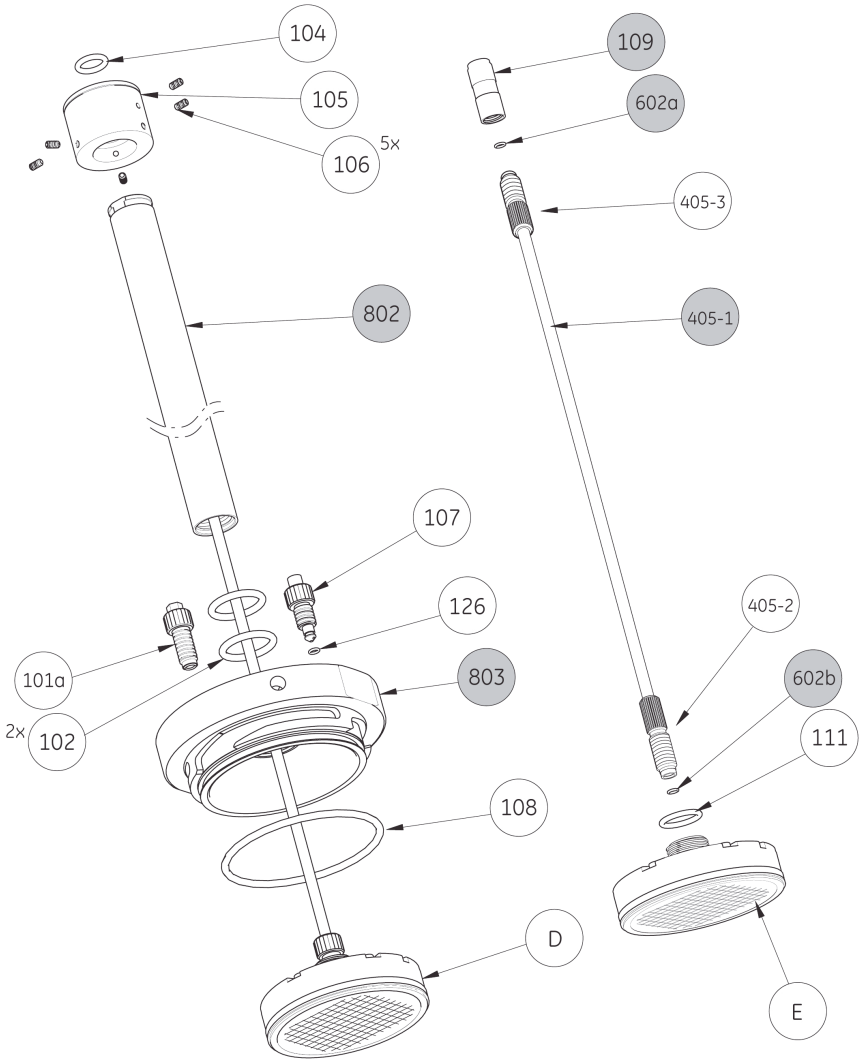

Adapter plate assembly and bottom plate assembly (stainless steel bed support)

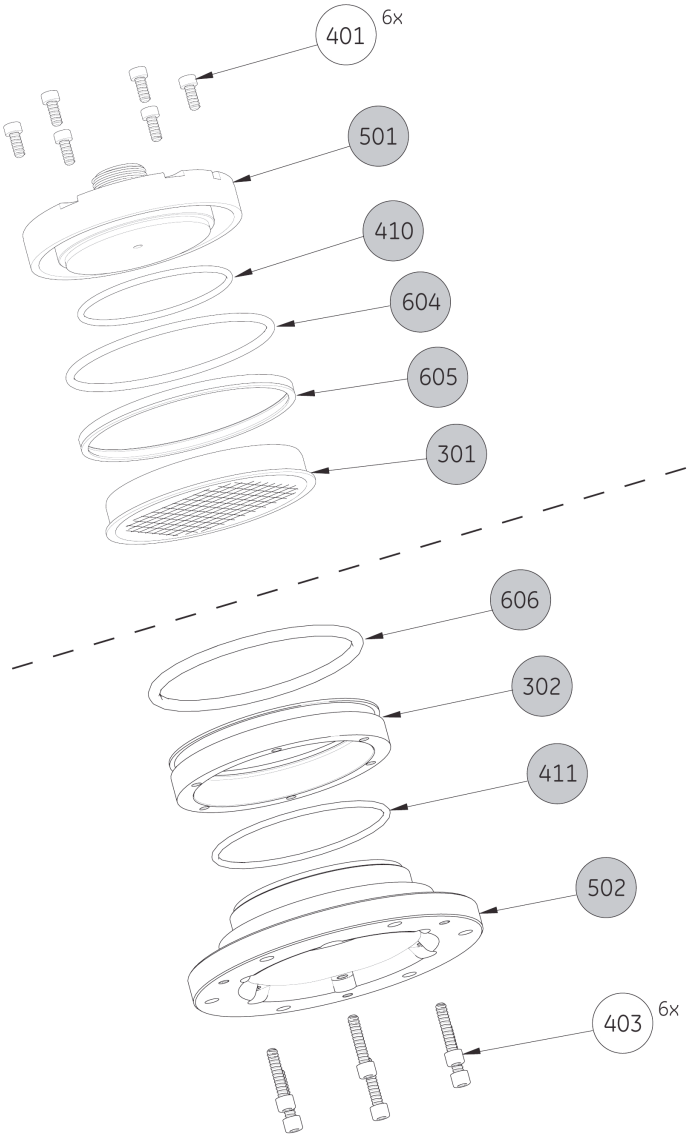

Adapter plate assembly and bottom plate assembly (plastic bed support)

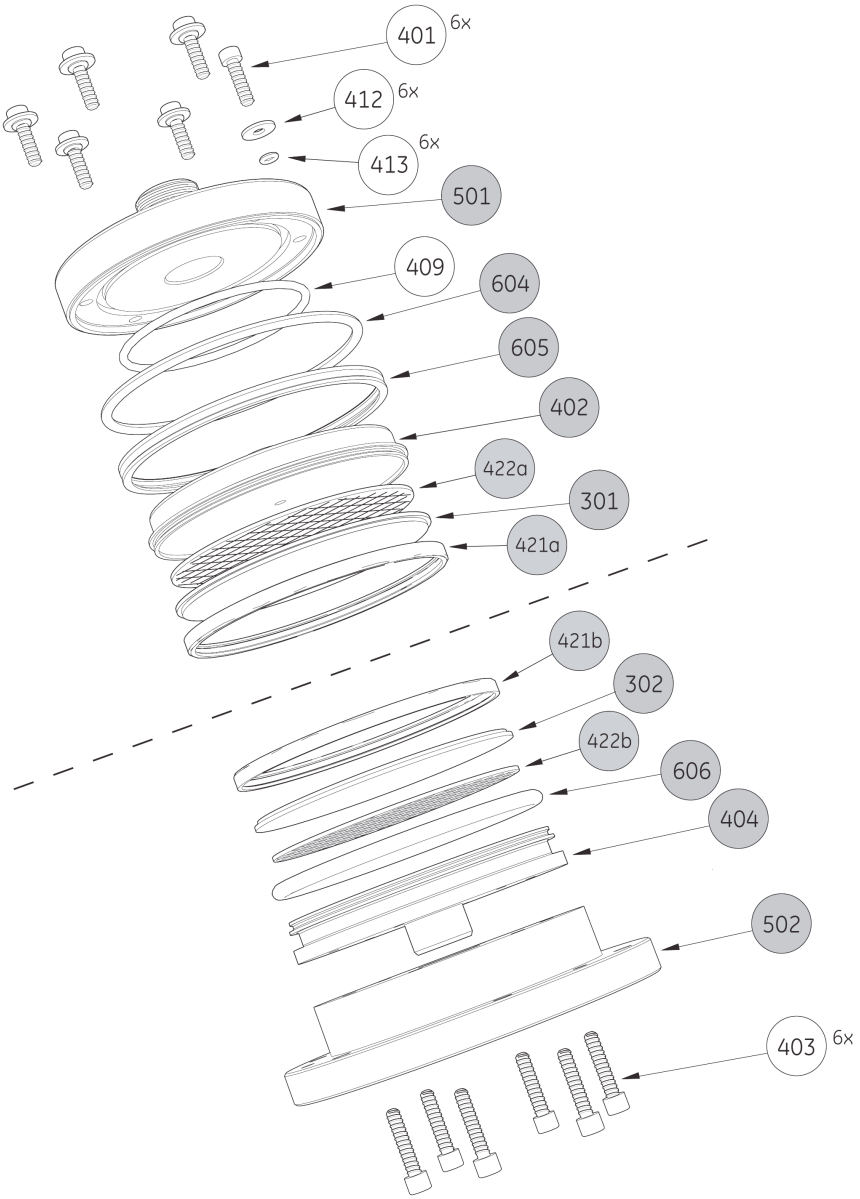

Column tube assembly

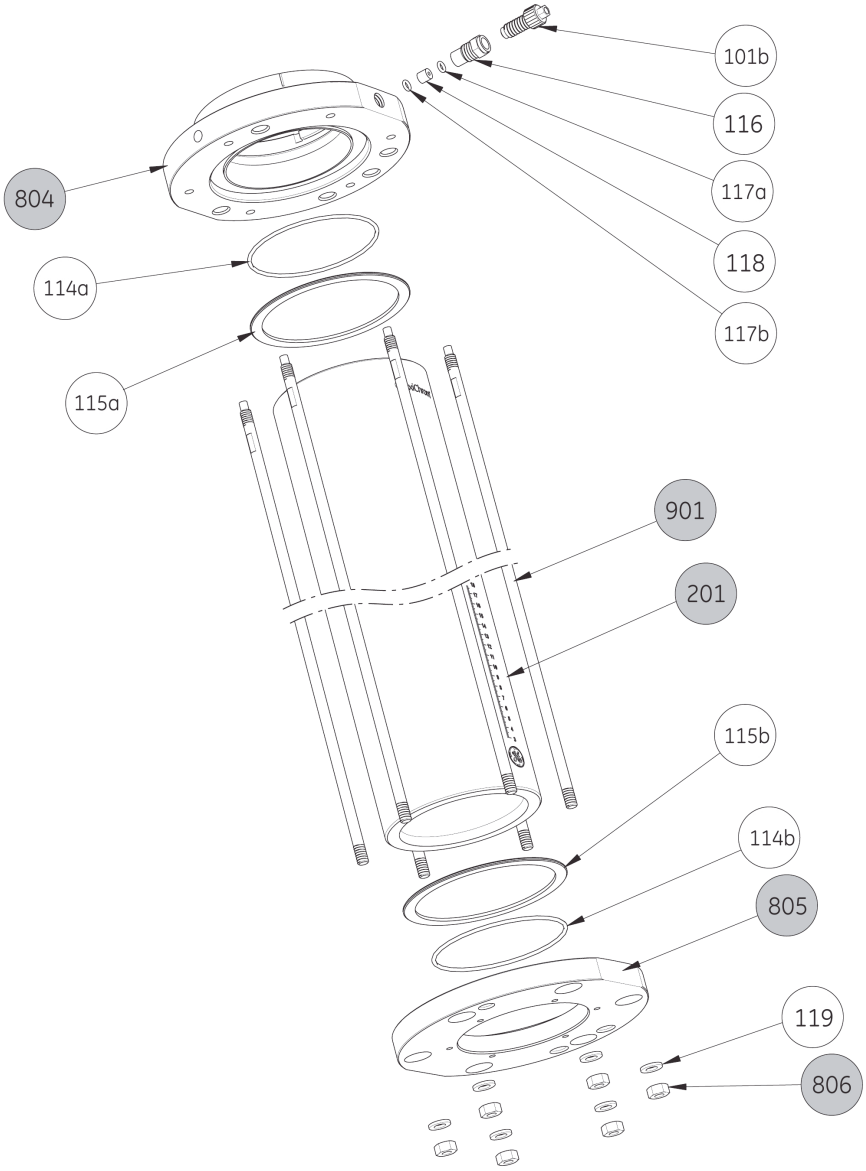

Appendix C

Parts lists and diagrams AxiChrom 100 column

Spare parts list for AxiChrom 100 column

Pos no.	Description
101 a,b	Stop plug 5/16", PKG/5
102	Guide ring 100
103	Adapter rod seal 100
104	O-ring 10.3x2.4
105	Adapter rod top 100
106	Set screw M4x5
107	Purge valve polished
108	O-ring 98x3
109	Tube connection 5/16 id 2.9 Fem/fem
111	O-ring 23.52x1.78
114 a,b	O-ring 104.5x3
115 a,b	Tube support 100
116	Check valve holder
118	Check valve, single cpl
119	Washer 8.4x16x1.5
131 a,b	Stop plug 5/16" USPVI
124	Check valve adapter
127	O-ring 70x2.5
201	Glass tube 100/300
201	Glass tube 100/500

Pos no.	Description
301	Bed support 100/top SS
301	Bed support 100, plastic
302	Bed support 100/bottom SS
302	Bed support 100, plastic
401	Screw M4x17
402	End cell 100, SS bed support
402	Distributor top 100, plastic bed support
403	Screw M3x25
404	End cell 100, SS bed support
404	Distributor bottom 100, plastic bed support
405-1,2,3	Adapter tube id 2.9, SS bed support
405-1,2,3	Adapter tube id 2.9, plastic bed support
411 a,b	O-ring 70x2.5
412	Washer 4.3x12.1 SS
413	O-ring 3.69x1.78
421 a,b	Snap ring 100, plastic bed support
501	Adapter plate 100, SS bed support
501	Adapter plate 100, plastic bed support
502	Bottom plate 100, SS bed support
502	Bottom plate 100, plastic bed support
601	O-ring 3x1
602 a,b	O-ring 3x1
604	O-ring 91.67x3.53
605	Scraper 100
606	O-ring 88x4
701-1	Pivot stand 50/70/100-300
701-1	Pivot stand 50/70/100-500
701-2	Screw M6x12

Pos no.	Description
801	Screw M6x20 SS
802	Adapter rod 100
803	Top plate 100
804	Top bayonet 100
805	Bottom flange 100
806	Hex. nut M8
901	Tie bar M8 300
901	Tie bar M8 500
A	Adapter and top plate assembly
B	Column tube assembly
C	Bottom plate assembly
D	Adapter assembly with tube
E	Adapter assembly
-	Bayonet tool
-	Centering tool 100
-	Mounting aid for o-rings
-	Hook wrench key

Diagrams

Symbol	Meaning
NO.	Number corresponds to Pos. no. in Material conformity and Spare part list.
	Illustrating parts in contact with process liquids and/or that are pressure retaining.

Column and pivot stand

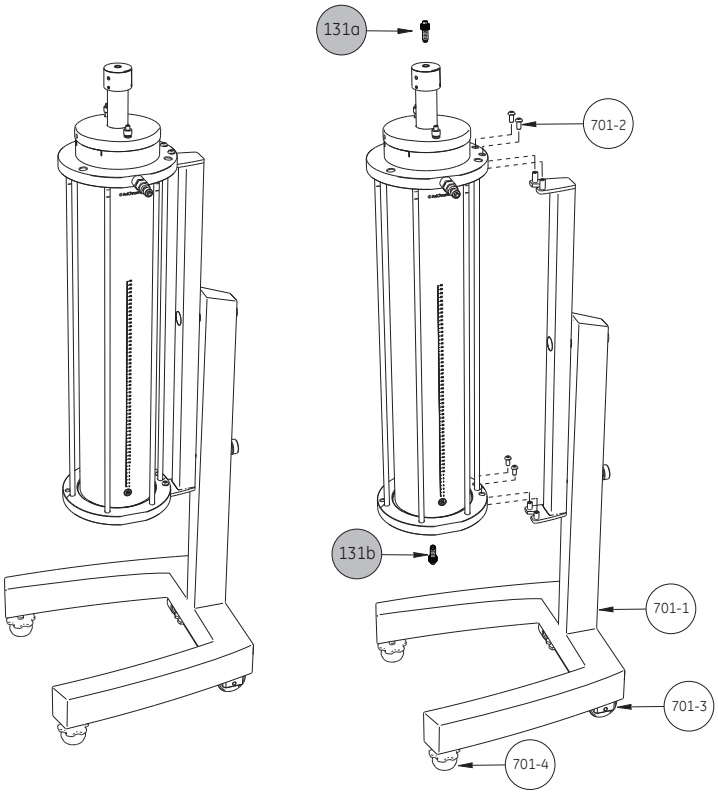

Column tube, adapter and bottom plate

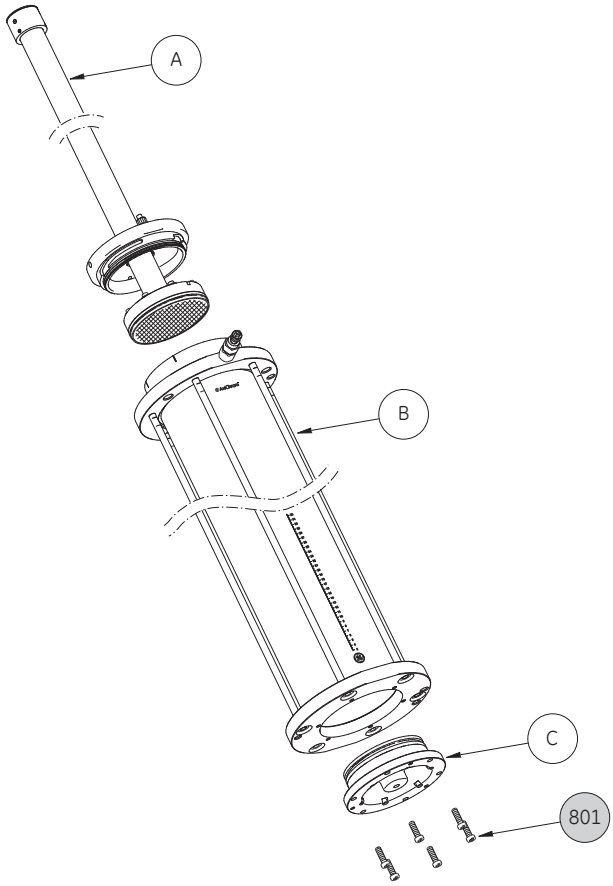

Adapter assembly, stainless steel bed support

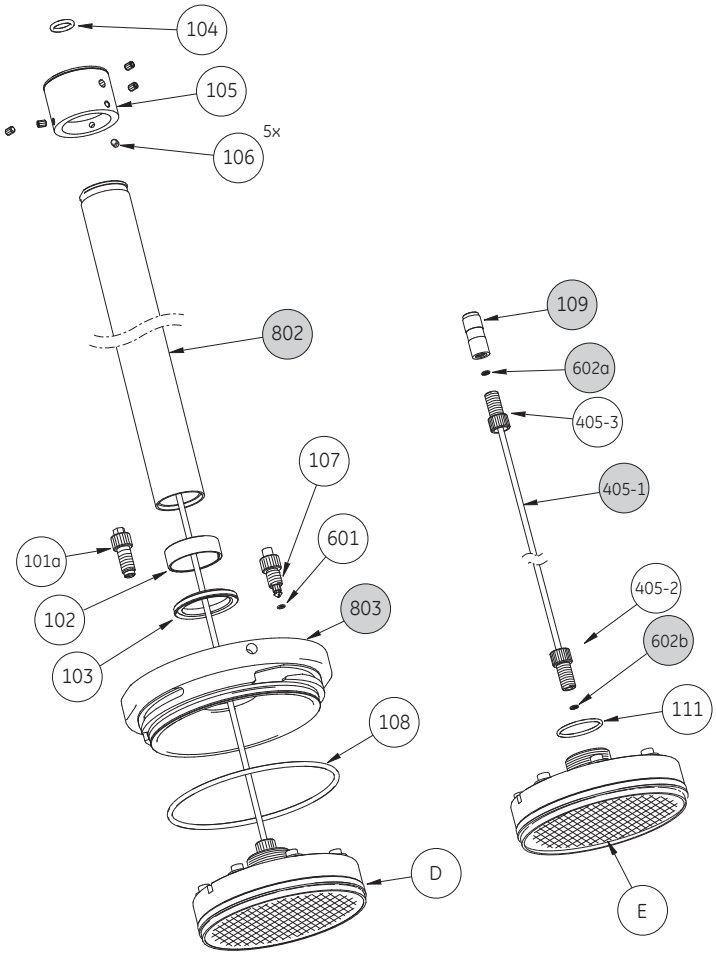

Adapter assembly, plastic bed support

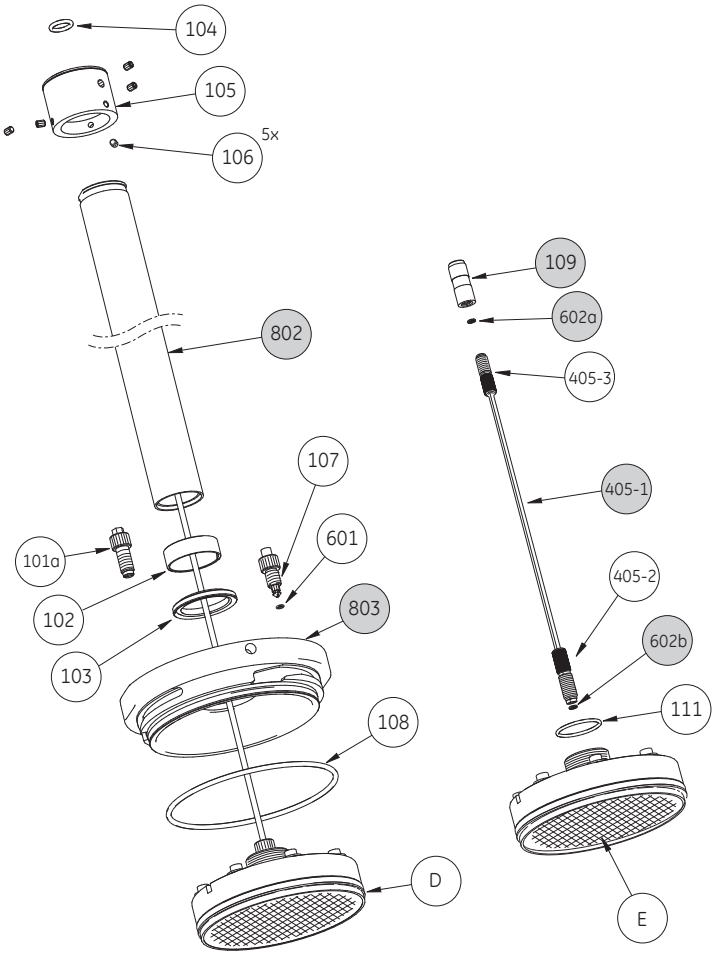

Adapter plate assembly and bottom plate assembly, stainless steel bed support

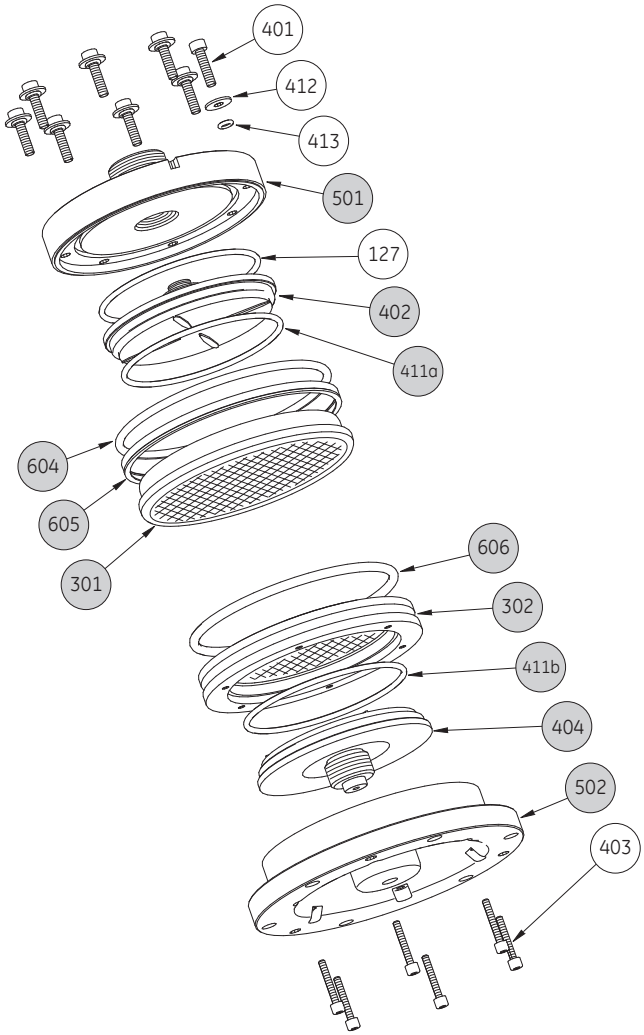

Adapter plate assembly and bottom plate assembly, plastic bed support

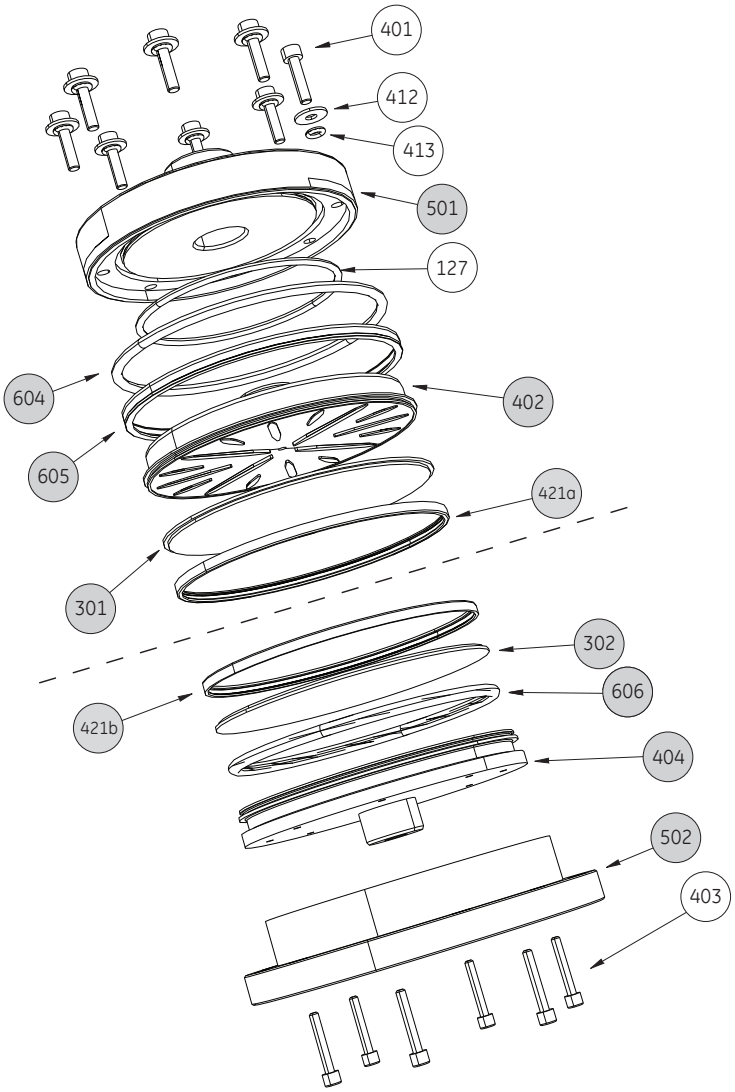

Column tube assembly

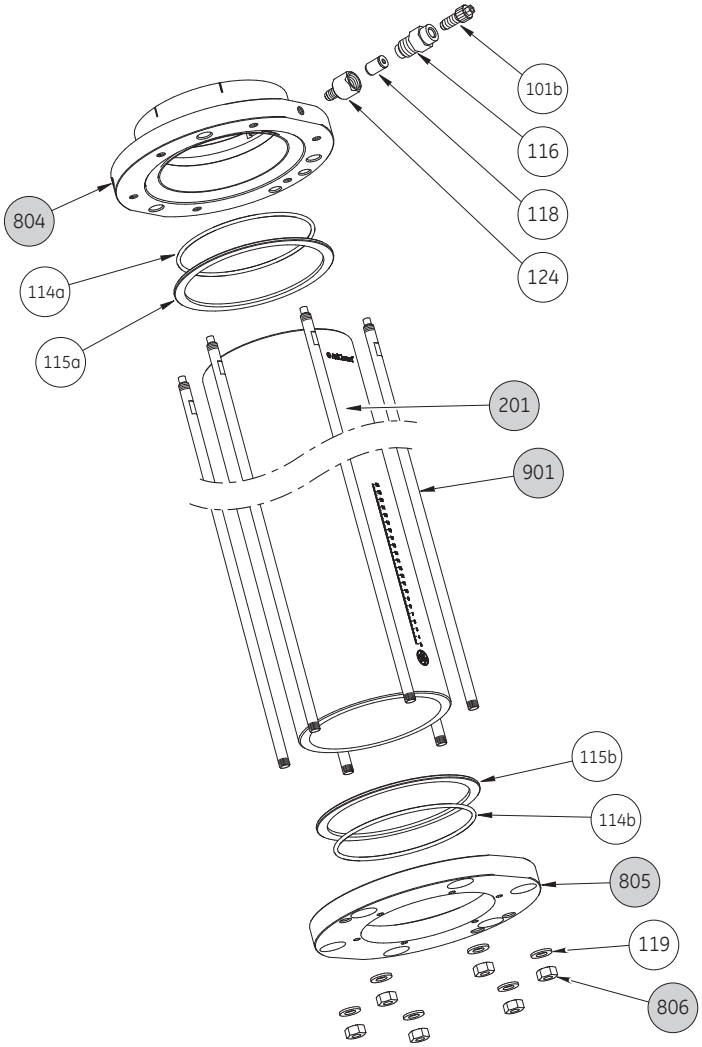

Appendix D

Parts list and diagrams 140-200 columns

Spare parts lists AxiChrom 140

Pos no.	Description
102	Guide ring AxiChrom 140/200
103	Top gasket AxiChrom 140/200
104	O-ring 26.64x2.62 EPDM
105	Adapter rod top AxiChrom 140/200
106	Set screw M4x5
107	Purge valve M12x1,25
108	O-ring 145.6x3.53 EPDM
111	O-ring 75.79x3.53 EPDM
114	O-ring 142x3 EPDM
115	Tube support AxiChrom 140
116	Check valve housing TC25
118	Check valve, single cpl
119	Washer 10.5x20 A4
124	Check valve adapter
125	Washer 8.4x16 A4
126	O-ring 7x1, EPDM
127	O-ring 158.5x3 EPDM
130	TC 25 Clamp SS
131	TC end cap TC25
133	O-ring 3x1, PFR91
201	Glass tube 300, AxiChrom 140

Pos no.	Description
201	Glass tube 500, AxiChrom 140
301	Bed support 140 top (SS)
301	Bed support 140 top (plastic)
302	Bed support 140 bottom (SS)
302	Bed support 140 bottom (plastic)
401	Hex socket head screw M4x20
402	End cell top AxiChrom 140 (SS)
402	Distributor top 140 (plastic)
403	Hex socket head screw M4x35
404	End cell bottom AxiChrom 140 (SS)
404	Distributor bottom 140 (plastic)
405-1	Adapter tube id 6 AxiChrom 140
405-2	Nut
411 a,b	O-ring 99.5x3 EPDM
412	Washer 4,3x12 A4
413	O-ring 3,69x1,78 EPDM
421 a,b	Snap ring 140 (plastic)
501	Adapter plate AxiChrom 140
502	Bottom plate AxiChrom 140
602	O-ring 5.23x2.62
604	O-ring 127.0x5.33 EPDM
605	Scraper AxiCh 140 UHMWPE
608 a, b	TC gasket 25/6.5
610	TC gasket 25/8.0
701-2	Hex socket head screw M8x12
701-3	Wheel kit, Stand 140/200
801	Hex socket head screw M8x25
802	Adapter rod AxiChrom 140/200

Pos no.	Description
803	Top plate AxiChrom 140
804	Top flange AxiChrom 140
805	Bottom flange AxiChrom 140
806	Nut M10 A4
807	Hex socket head screw M6x10
808	Hex head screw M8x20 SS
901	Extender rod M10 300, 140/200
901	Extender rod M10 500, 140/200
	Centering tool AxiChrom 140
	Spacer tool AxiChrom 140/200
	Mounting aid for O-rings

Spare parts lists AxiChrom 200

Pos no.	Description
102	Guide ring AxiChrom 140/200
103	Top gasket AxiChrom 140/200
104	O-ring 26.64x2.62 EPDM
105	Adapter rod top AxiChrom 140/200
106	Set screw M4x5
107	Purge valve M12x1,25
108	O-ring 207x3.4 EPDM
111	O-ring 75.79x3.53 EPDM
114	O-ring 203x3 EPDM
115	Tube support AxiChrom 200
116	Check valve housing TC25
118	Check valve single cpl
119	Washer 10.5x20
124	Check valve adapter

Pos no.	Description
125	Washer 8.4x16 A4
126	O-ring 7x1, EPDM
127	O-ring 158.5x3 EPDM
130	TC 25 Clamp SS
131	TC end cap TC25
133	O-ring 3x1, PFR91
201	Glass tube 300, AxiChrom 200
201	Glass tube 500, AxiChrom 200
301	Bed support 200 top (SS)
301	Bed support 200 top (plastic)
302	Bed support 200 bottom (SS)
302	Bed support 200 bottom (plastic)
401	Hex socket head screw M4x23
402	End cell top AxiChrom 200 (SS)
402	Distributor top 200 (plastic)
403	Hex socket head screw M4x35
404	End cell bottom AxiChrom 200 (SS)
404	Distributor bottom 200 (plastic)
405-1	Adapter tube id 6 AxiChrom 200
405-2	Nut
411 a,b	O-ring 158.5x3 EPDM
412	Washer 4,3x12 A4
413	O-ring 3,69x1,78 EPDM
421 a,b	Snap ring 200 (plastic)
501	Adapter plate AxiChrom 200
502	Bottom plate AxiChrom 200
602	O-ring 6.3x2.40
604	O-ring 184.3x5.7 EPDM

Pos no.	Description
605	Scraper AxiChrom 200 UHMWPE
608 a,b	TC gasket 25/6.5
610	TC gasket 25/8.0
701-2	Hex socket head screw M8x12
701-3	Wheel kit, Stand 140/200
801	Hex socket head screw M8x25
802	Adapter rod AxiChrom 140/200
803	Top plate AxiChrom 200
804	Top flange AxiChrom 200
805	Bottom flange AxiChrom 200
806	Nut M10
807	Hex socket head screw M6x14
808	Hex head screw M8x20 SS
901	Extender rod M10 300, 140/200
901	Extender rod M10 500, 140/200
	Centering tool AxiChrom 200
	Spacer tool AxiChrom 140/200
	Mounting aid for O-rings

Diagrams

Symbol	Meaning
No.	Number corresponds to Pos. no. in Material conformity and Spare part list.
	Illustrating parts in contact with process liquids and/or that are pressure retaining.

Column and pivot stand

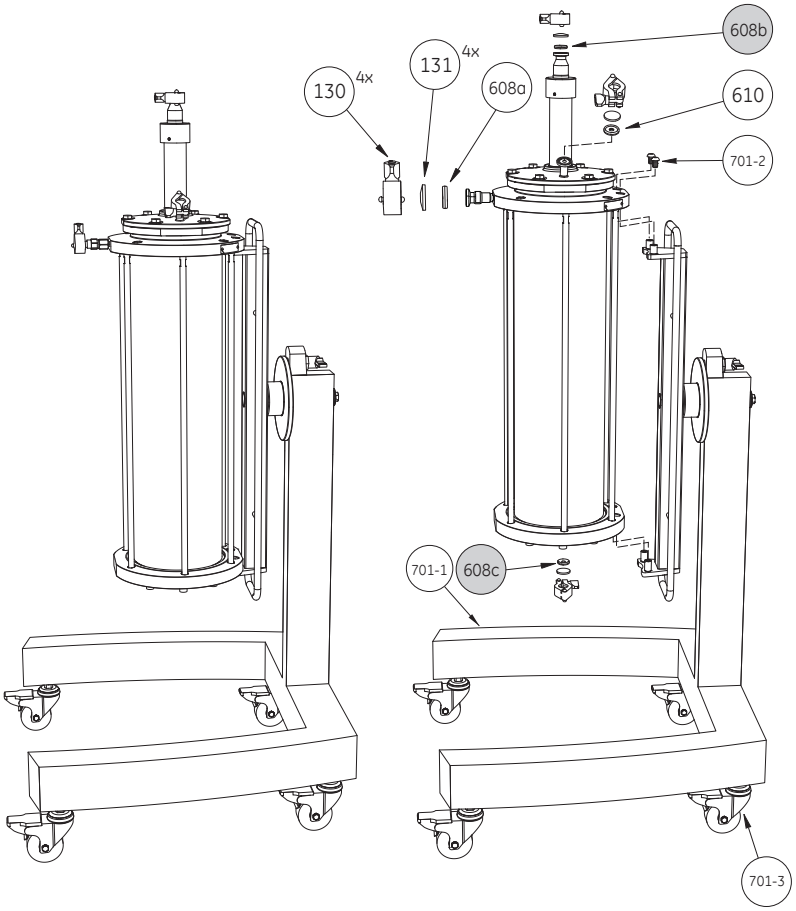

Column tube, adapter and bottom plate

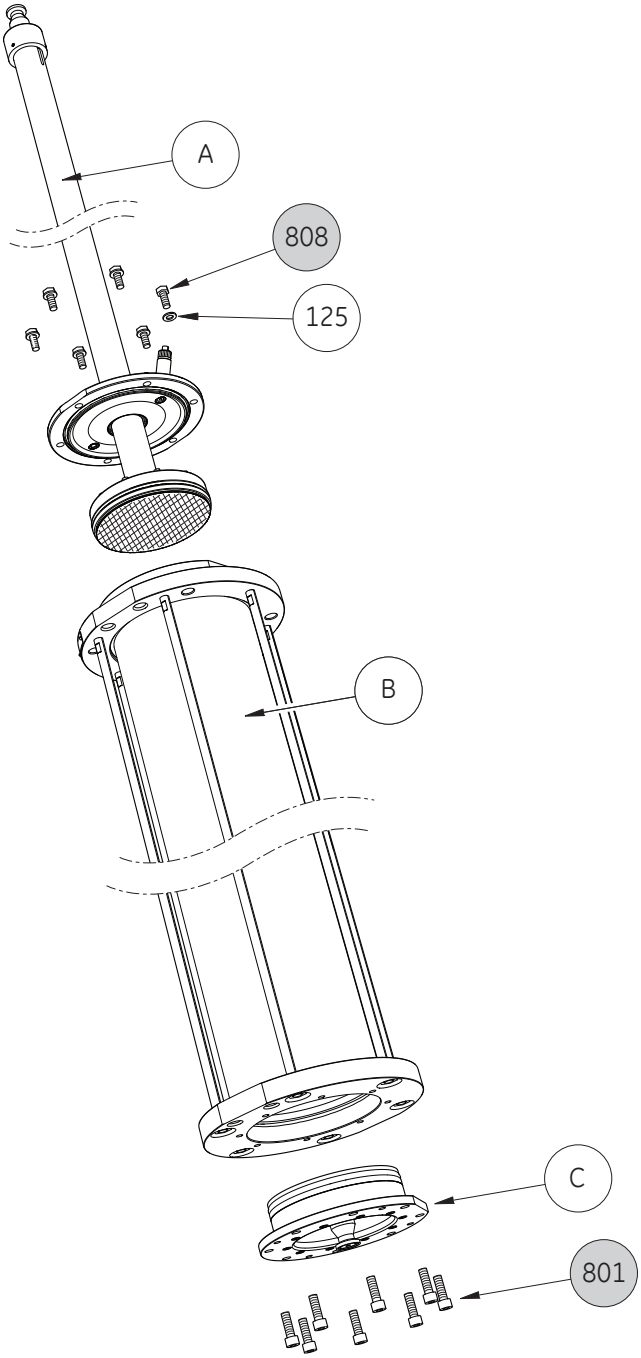

Adapter assembly

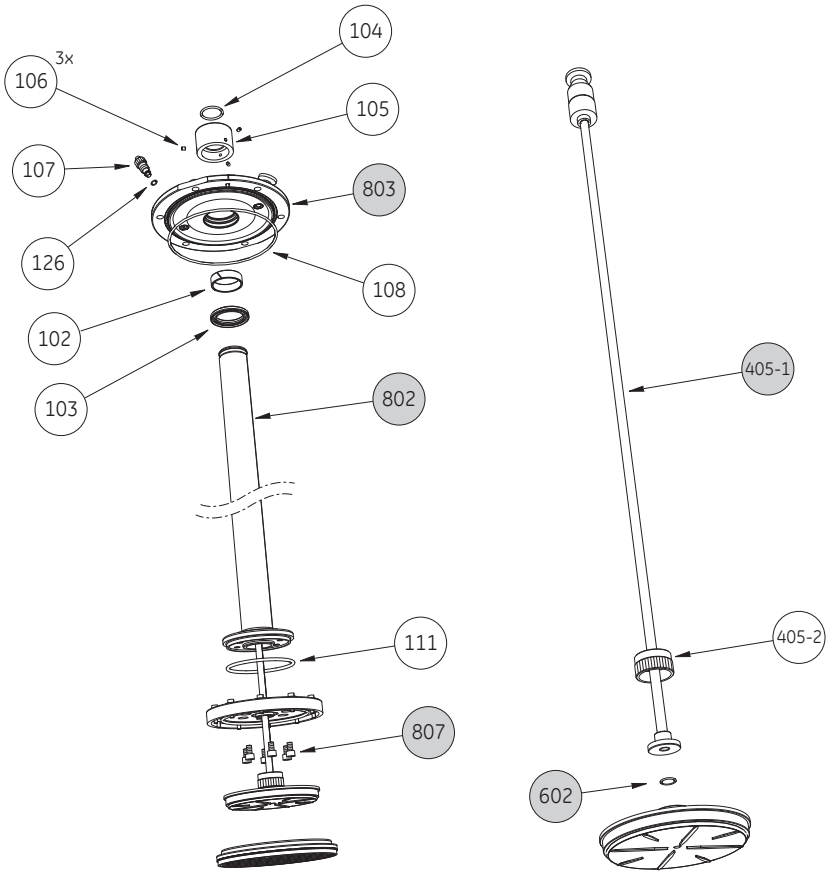

Adapter plate assembly and bottom plate assembly (Stainless steel bed support)

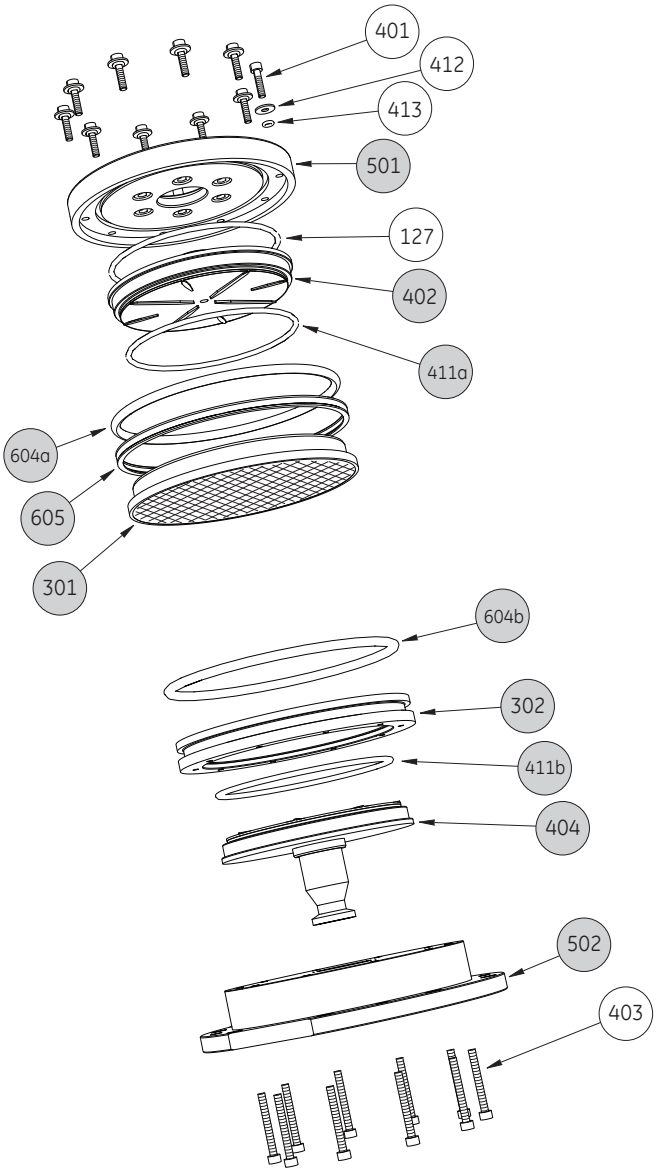

Adapter plate assembly and bottom plate assembly (Plastic bed support)

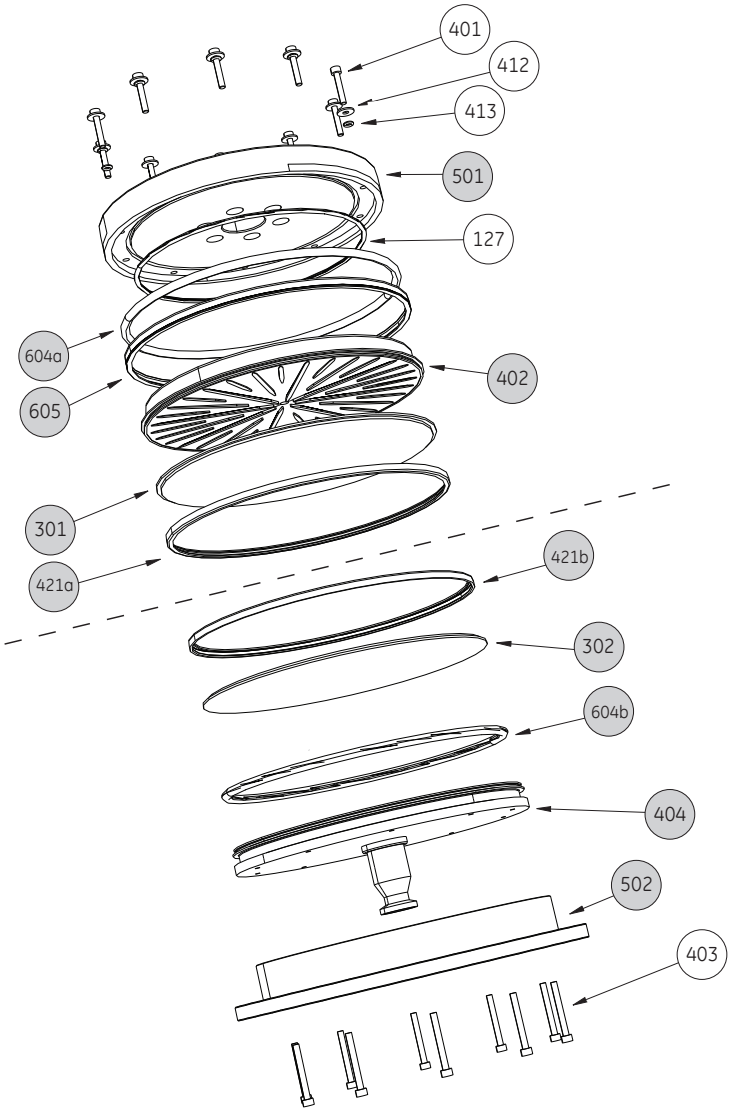

Column tube assembly

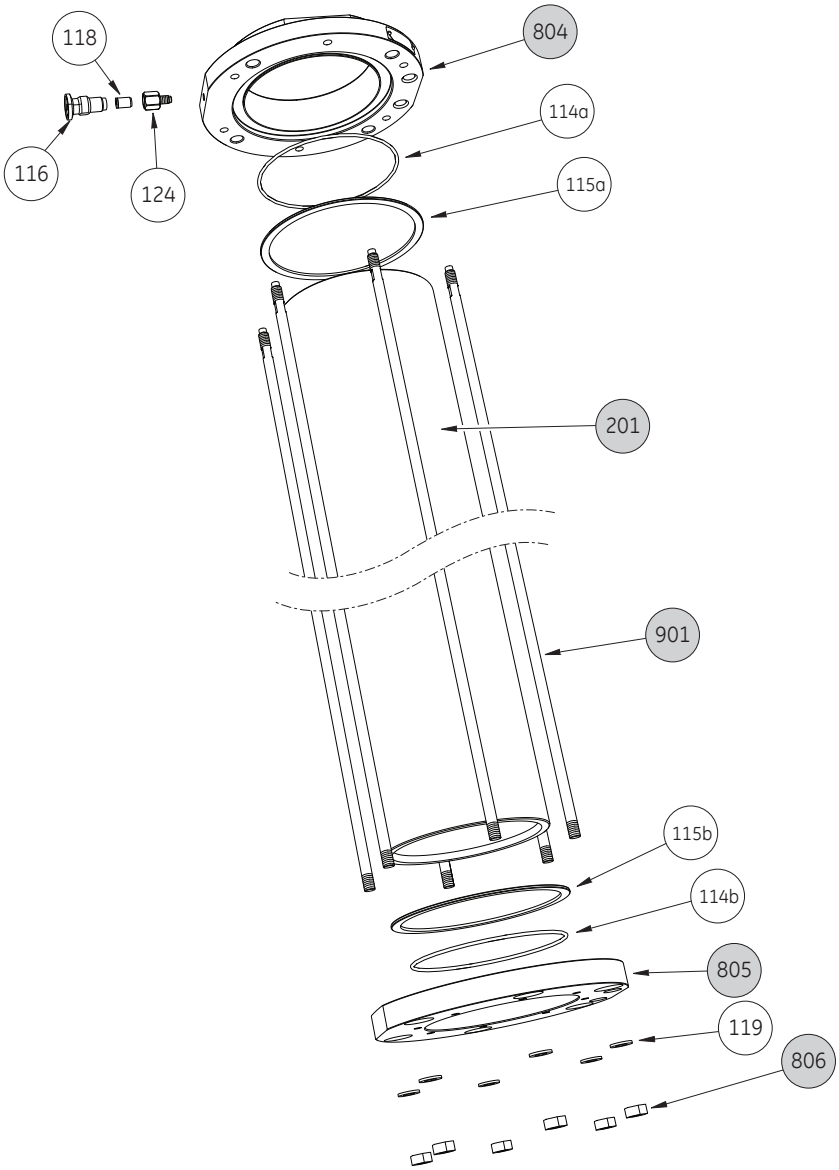

Index

R

S

T

U

W

Page intentionally left blank

Page intentionally left blank

cytiva

cytiva.com/axichrom

For local office contact information, visit cytiva.com

29379190 AB V:16 07/2021